redge

HVAC CATALOGUE

- AIR CONDITIONING & HEATING
- AIR TREATMENT & VENTILATION
- CONTROL & SUPERVISION



NEXT LEVEL HVAC SOLUTIONS

2026 EDITION

REDGE
AT YOUR SERVICE



WHO ARE WE?	3
A WORLD OF APPLICATIONS	4
REGULATIONS AND CERTIFICATIONS	6

AIR CONDITIONING & HEATING		Refrigerants	Cooling/Heating capacity & Airflow rate		Page
Rooftops	**Evio**	R32	❄ 29 - 250 kW / 🔥 29 - 247 kW 4000 - 49500 m³/h	EUROVENT CERTIFIED PERFORMANCE	19
	Evio Ever	R-290	❄ 26 - 65 kW / 🔥 26 - 65 kW 4000 - 22000 m³/h	EUROVENT CERTIFIED PERFORMANCE	27
Heat Pumps & Chillers	**Elevate** Inverter	R-290	🔥 45 - 60 kW	EUROVENT CERTIFIED PERFORMANCE	39
	eComfort Inverter	R32	❄ 35 - 210 kW / 🔥 35 - 210 kW	EUROVENT CERTIFIED PERFORMANCE	43
	eComfort Therma	R32	🔥 220 - 500 kW	EUROVENT CERTIFIED PERFORMANCE	61
	eComfort MC Inverter	R32	❄ 220 - 700 kW	EUROVENT CERTIFIED PERFORMANCE	67
	eProcess Inverter	R1234ze R515B	❄ 310 - 1550 kW	EUROVENT CERTIFIED PERFORMANCE	75
		R513A R134a	❄ 330 - 1950 kW	EUROVENT CERTIFIED PERFORMANCE	75
		R1234ze	❄ 280 - 1220 kW	EUROVENT CERTIFIED PERFORMANCE	75
		R513A	❄ 200 - 1450 kW	EUROVENT CERTIFIED PERFORMANCE	75
Roomtops	**Flatair Advanced** Inverter	R410A	❄ 22 - 33 kW / 🔥 20 - 29 kW 3700 - 5600 m³/h	---	121
	Compactair Advanced	R410A	❄ 22 - 82 kW / 🔥 20 - 80 kW 5400 - 18700 m³/h	---	127
	Compactair Essential	R410A	❄ 19 - 97 kW / 🔥 20 - 105 kW	---	133
	Aqualean	R410A	❄ 2,79 - 41 kW / 🔥 3,37 - 50 kW 670 - 7500 m³/h	---	135
Condensing Units	**Aircoolair**	R410A	❄ 19,7 - 228 kW / 🔥 19,8 - 218 kW	---	145
VRF	**e-Lite**	R410A	❄ 8 - 270 kW / 3 - 96 HP	---	153

AIR TREATMENT & VENTILATION			Refrigerants	Cooling/Heating capacity & Airflow rate		
Fan Coil Units	**Allegra** **Allegra ECM**		WATER	❄ 1 - 9 kW / 🔥 1 - 12 kW ≋ 60 - 1670 m³/h	EUROVENT CERTIFIED PERFORMANCE	163
	Armonia **Armonia ECM**		WATER	❄ 2 - 16 kW / 🔥 2 - 15 kW ≋ 20 - 2480 m³/h	EUROVENT CERTIFIED PERFORMANCE	181
	Comfortair HD3 **Comfortair HD3 ECM**		WATER	❄ 1 - 4 kW / 🔥 1 - 4 kW ≋ 250 - 780 m³/h	EUROVENT CERTIFIED PERFORMANCE	197
	Inalto MPS **Inalto MPS ECM**		WATER	❄ 2 - 10kW / 🔥 2 - 11 kW ≋ 290 - 1923 m³/h	EUROVENT CERTIFIED PERFORMANCE	205
	Inalto HPS **Inalto HPS ECM**		WATER	❄ 5 - 40 kW / 🔥 4 - 73 kW ≋ 516 - 5668 m³/h	EUROVENT CERTIFIED PERFORMANCE	233
Units Heaters	**Axil / Equitherm**		WATER	❄ 4 - 20 kW / 🔥 12 - 105 kW ≋ 1600 - 9100 m³/h	---	255
	Axil EC		WATER	❄ 4 - 22 kW / 🔥 3 - 44kW ≋ 740 - 7085 m³/h	---	259
Air Handling Units	**CleanAir LX**		---	❄ 2 - 550 kW / 🔥 10 - 1300 kW ≋ 1000 - 100000 m³/h	EUROVENT CERTIFIED PERFORMANCE	265
	OneAir		---	≋ 450 - 80000 m³/h	---	269
Air-Cooled Condensers & Dry-coolers	**Neostar**	---	HFC	18 - 1280 kW	---	287
	FC/FI Neostar Pulse	---	WATER	20 - 1200 kW	---	287
	V-King Pulse	---	WATER	50 - 2200 kW	---	287
CONTROL & SUPERVISION						Page
Control and supervision	**RedgeCloud**	---	---	---	---	279
	e-savvy	---	---	---	---	283

WHO ARE WE?

Redge is a leading provider of refrigeration, heating, air conditioning and air handling solutions. We are committed to assisting our clients in their projects in order to provide optimal and sustainable solutions.

At Redge, we ensure that every employee develops within the group and contributes to our customers' projects success. Our reputation grows every day by providing maximum comfort and efficiency through our air conditioning and refrigeration solutions.

Our reputation as a leading market player is based on simple principles that guide our actions: the ability to listen to our customers, knowledge of their business and understanding of their needs.

The commitment and expertise of all Redge employees are key to the trust our customers place in us every day and to ensuring the continuity of our relationships. More than ever, Redge is committed to rising to tomorrow's challenges alongside you.

Thierry JOMARD
CEO Redge

OUR KEY FIGURES

900
employees
in Europe

3
European production sites: Genas, Longvic and Burgos





1
European training centre and 1 European HVAC&R development centre

9
subsidiaries and sales offices

46
Commercial presence over 46 countries

A WORLD OF APPLICATIONS



CAFÉS RESTAURANTS

In a dining setting, guest comfort is critical to an enjoyable experience. But hard-working staff need to be taken care of as well. Redge solutions provide reliable, efficient cooling and heating configurations that help create the perfect environment for food preparation and dining.



CONVENIENCE STORES

In smaller format stores, customer comfort and efficiency are key priorities. Redge compact and aesthetic solutions provide the ideal temperature while optimising the energy footprint.



CULTURAL AND SPORT CENTRES

Performance and sports venues can be a challenging space to maintain temperature and humidity. Redge solutions are designed to be easily modified for variable heating and cooling needs to accommodate any size crowd effectively and efficiently.

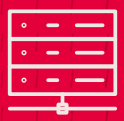

DATA CENTRES

In data centres, heat management is crucial. Redge units provide reliably efficient cooling solutions that help data centre operators reduce the energy costs while maximising uptime.



FOOD RETAIL

In large, open spaces, priorities for HVAC performance include both comfort and efficiency. With Redge, one doesn't have to come at the cost of the other, with products and technology that deliver ideal heating and cooling solutions tailor-made for spacious retail settings.



HOSPITALS

For patients and guests, a healthcare environment can be an unfamiliar and uncomfortable place. Redge products feature customizable applications with medical-grade air quality components to help enhance patient comfort and maintain a sanitary setting for everyone.



HOTELS

The environment in a hospitality setting is closely associated with customer satisfaction. Redge can optimise guest comfort with a range of heating and cooling solutions while providing property owners with the most efficient options to maximize their HVAC investment in every location.



INDUSTRY

In large, open industrial spaces, keeping the set temperature constant across the entire building is of utmost importance. Redge solutions offer industrial spaces accurate temperature, regardless of the activity or time.



NON-FOOD RETAIL

In large, open spaces, priorities for HVAC performance include both comfort and efficiency. With Redge one doesn't have to come at the cost of the other, with products and technology that deliver ideal heating and cooling solutions tailor-made for spacious retail settings.



OFFICE BUILDINGS

A facility with an optimal HVAC system can have a direct impact on employee performance. Offering system-wide temperature control, as well as individual office control, Redge can help enhance employee focus in a comfortable working environment.



SHOPPING MALLS

A pleasant store environment means longer visit times and potentially increased sales. Redge customized products and controls offer retail spaces the most effective heating and cooling options, regardless of their size or configuration.



STORAGE & LOGISTICS

A key success metric in distribution applications is keeping employees productive when fulfilling orders. Redge products and technology have been engineered to maintain comfort without compromising efficiency to deliver a win/win for staff and facility owners.

Our company has more than 60 years history inventing new technologies, developing new products and continuously enhancing product quality and improvements that address the world's heating, cooling and air quality challenges.

Following the group's lead, we at Redge, are ready and committed to tackling climate change by designing, manufacturing and marketing efficient and environmentally-friendlier HVAC-R solutions. Developing products with progressively less carbon impact – through greater energy efficiency and use of refrigerants with lower global warming potential (GWP) is at the heart of our product strategy.

For the last few years, we have been dedicated to aligning the design of our climate control and refrigeration solutions with the European EcoDesign and F-Gas regulations.

Our Redge units have recently been upgraded to meet or exceed the new EcoDesign 2021 thresholds, while we are continuing our refrigerant transition towards R32 and lower GWP refrigerants.

OVERVIEW OF OUR SUSTAINABLE JOURNEY

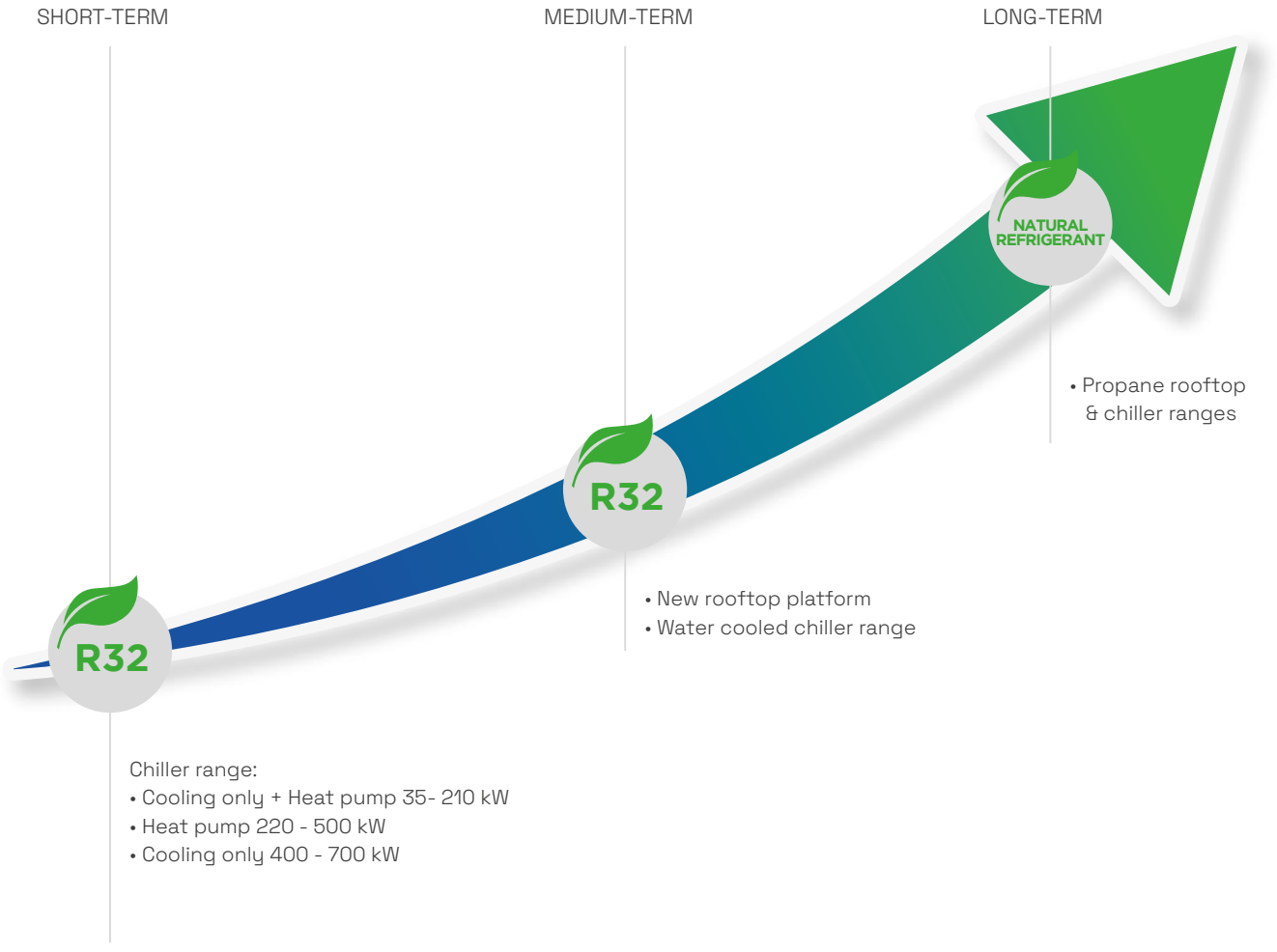

ECODESIGN
Directive 2009/125/EC

The **KYOTO** Agreement (1997), the **COP 21** (Paris 2015) and the **COP 22** (Marrakech 2016) set targets for limiting global warming to 1.5 °C. The **Ecodesign Directive 2009/125/EC** defines a framework for all energy-consuming equipment. Voted on in 2007, and implemented since 2008, it aims to reduce the power consumption of electronic devices through better design (ecodesign).

The implementation of the Ecodesign Directive is split into several areas of related products, called **"lots"**, focusing on the product areas with the most substantial energy consumption and the highest potential for energy savings.

The Ecodesign Directive is mandatory for all products marketed and used in the European Union (CE marking).



MINIMUM EFFICIENCY PERFORMANCE STANDARD (MEPS)

Requirements for minimum efficiency performance are set in Europe as a consequence of the implementation of the Ecodesign Directive. The regulation has been introduced step-by-step and the requirements gradually intensified over time.

With the introduction of the second and last tier of ENER LOT 21, or directive (EU) 2016/2281 for air heating and cooling products, high temperature process chillers and fan coil units, most of our units have had their minimum energy performance levels increased, and have thus been optimised to meet or exceed the new thresholds.

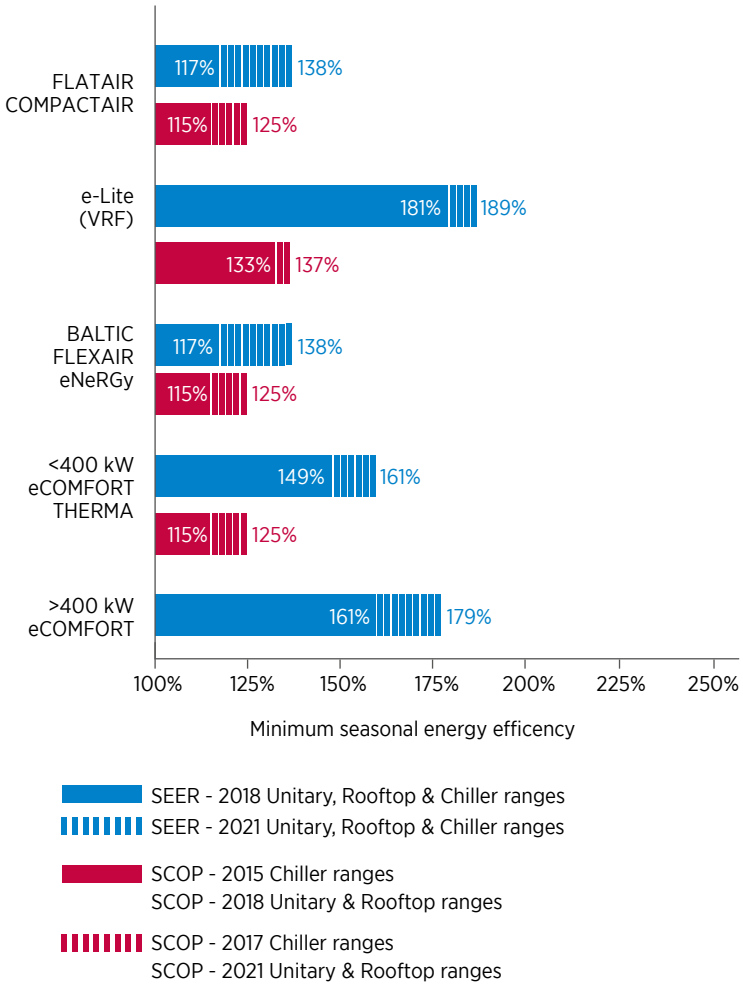

The Aqualean, Baltic water cooled, Flexair water cooled ranges are impacted, but no minimum performance to be reached. The eNeRGy without condenser range is impacted by the EU 2014/1253 (ventilation units). The ASC / ASH condensing units are not impacted.

WHAT IS F-GAS?

The hydrofluorocarbon (HCFC) refrigerants used in cooling systems today are considered to be powerful greenhouse gases. To prevent climate changes and global warming, the European Commission has adopted a roadmap to reduce global emissions by 2050.

EU Regulation No. 517/2014, known as **F-Gas**:

- Lays down rules regarding the containment, use, recovery and destruction of fluorinated greenhouse gases and the related measures.
- Lays down the conditions for marketing certain products and equipment containing HFCs.
- Imposes conditions on certain specific uses of fluorinated greenhouse gases.
- Sets quantitative limits (quotas) for marketing HFCs.

This Regulation is for all companies that install, maintain and sell equipment containing refrigerants, as well as those that handle and distribute them.

DESIGN & MAINTENANCE OF EQUIPMENT

All equipment must be designed to prevent accidental discharge of greenhouse gases. Technical measures are taken upstream in order to minimise these leaks (refer to Regulation (EU) No. 517/2014 specifying the procedures for leakage checks).

The F-Gas regulation on fluorinated gases imposes:

- Frequent inspections.
- Qualification of companies & their agents.

QUOTAS: "PHASE DOWN"

The European Commission is responsible for assigning the HFC quotas available on the market to companies. This measure aims to reduce the total amount of HFCs available on the market, so that the remaining share of HFCs (21% in 2030) is only used for the maintenance of existing equipment and/or for certain specific applications for which there is no alternative.

Marketing timetable (expressed in t CO2e)

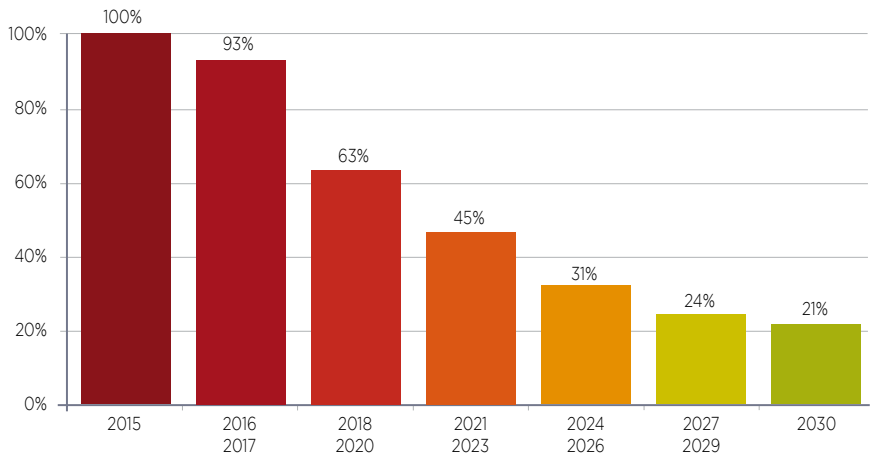

WHAT IS GWP?

All HFC refrigerants placed on the market are classified according to a Global Warming Potential (GWP). The GWP is an index that characterises the action of a chemical compound on the greenhouse effect within a given time. The reference refrigerant is CO2, of which the GWP is 1. The lower the index, the more environmentally-friendly the refrigerant.

New equipment is subject to restrictions based on the GWP of the refrigerants. So, refrigerants with a GWP greater than 2500 have been banned in new installations since January 2020.

The availability of HFCs will be limited by falling production quotas.

Refrigerants overview according to their GWP

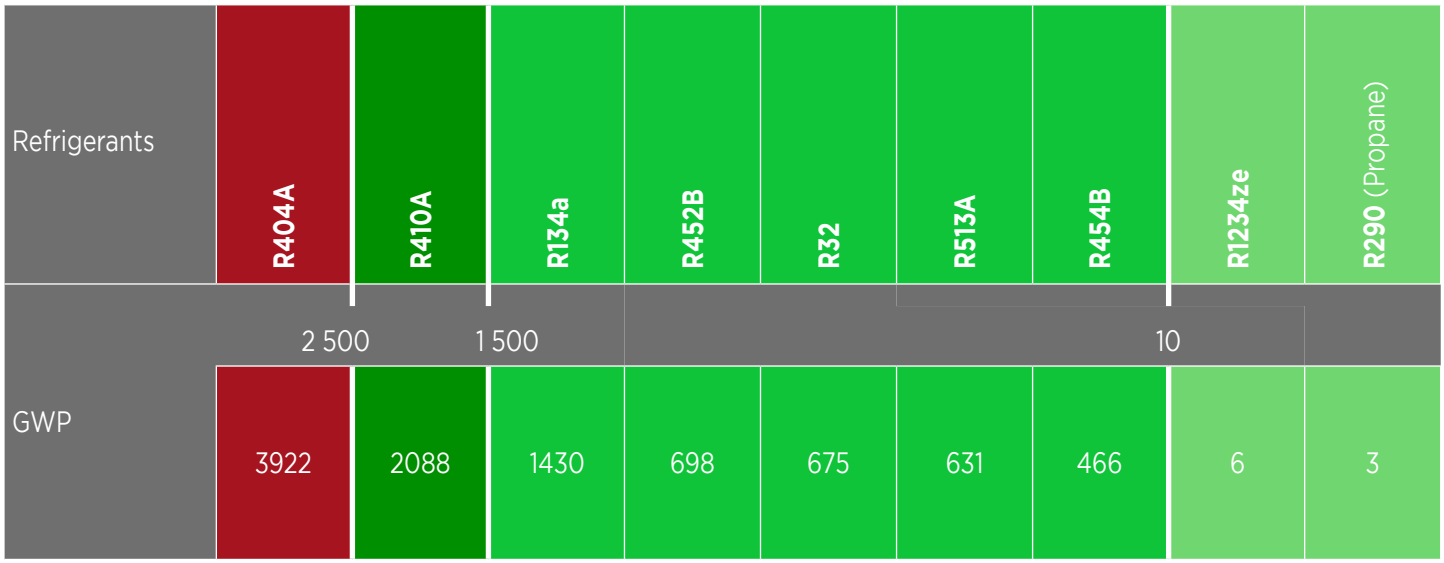

R32, THE OBVIOUS ALTERNATIVE TO R410A

In the quest of alternative solutions to this HFC quota reduction, R32 is an obvious choice to replace R410A. It already makes up 50% of its composition, and it has a number of other key advantages:

- Low cost
- Pure substance
- Many providers due to no patent
- Already available on residential market
- GWP = 675

R513A & R1234ze, OPTIMUM REPLACEMENTS FOR R134a

R513A and R1234ze are excellent alternatives to R134a. These low-density refrigerants are ideal for large capacity chillers, with screw compressors. Both refrigerants are easy to retrofit to R134a systems – and because they are much less damaging to the environment, they benefit from lower taxes and leak test demands.

ISO

A guarantee of quality

The ISO family of standards has been developed to address various aspects of quality management. ISO certification enables us to guarantee the circulation of safe and quality products on the market. The various ISO standards also contribute to the fact that companies such as ours optimise their production methods, while guaranteeing our employees' safety.

Our company is ISO-certified and thus meets quality assurance criteria:

ISO 9001 - lays down the criteria applicable to a quality management system.
ISO 14001 - lays down the criteria applicable to an environmental management system.
ISO 45001 - establishes the method for setting up an occupational health and safety management system.



CE

The **CE marking** was created within the framework of European technical harmonisation legislation. It represents a manufacturer's commitment that its product complies with the regulatory requirements for free movement throughout the European Union. This marking is mandatory for all products covered by one or more European regulatory texts that explicitly provide for it. As a manufacturer, and in order to allow the circulation of our products, we rigorously ensure the conformity of our products with regard to the essential requirements defined by European legislation.

Our declaration of conformity specifies the applicable guidelines for the entire catalogue by product range.

redge
SERVICES

At Redge, we know that purchasing equipment is just the beginning of your HVAC investment. That's why we are committed to offer you unique support over the entire life of your equipment.

From commissioning to modernisation of your HVAC system, our service team is here to provide you with the right expertise in order to ensure its optimal running and extended lifespan.







REDGE CARE

Benefit from OEM expertise for peace of mind.

Commissioning: our technicians perform all startup procedures and ensure your system is running efficiently and reliably from the start.

Maintenance: HVAC units often operate under harsh conditions that can affect their lifetime and performance, leading to extra energy consumption and operational costs. Partnering with our experts is the guarantee maintenance checks and audits are performed at the right time.

Repairs: count on our factory-trained technicians to efficiently solve problems and reduce downtime.

SPARE PARTS

Order them quickly and easily.

For your own repairs, our dedicated team supports you throughout the process of spare parts procurement – from the selection to the delivery.

MODERNISATION

Take your HVAC equipment to the next level.

Rely on our team to make sure your existing equipment keeps running efficiently. Our upgrade solutions – from latest fan technology, Indoor Air Quality (IAQ), controls & connectivity, to lower GWP refrigerants – will help you to keep a high performing building.

redge
ACADEMY



Training is one of the most important investments you can make in your business, and your future. The best technicians, sales and business people are life-long learners. The technician who's up to speed on the latest industry technology earns a customer's loyalty. A salesperson who sells an extra unit per week can bring in a significant extra in annual profit. Business owners and office staff who take the time to enhance their own knowledge and skills will create a thriving, growing workplace.

Redge Academy offers training programmes, designed to help you hone your skills, expand your knowledge in an ever changing technological and regulatory environment and excel in your field. With our face-to-face, virtual classroom or webinar offerings, you can choose what best works for you.

All our trainings are delivered by our experienced instructors who have extensive knowledge in the HVAC-R industry and Redge equipment.

ON-SITE COURSES

- Learn how to install and service Redge units.
- Learn how to handle A2L refrigerants.
- Sessions offered at various locations.

VIRTUAL COURSES

- Training, with no travel. We're bringing the classroom to you.
- Keep up with the latest industry trends and regulations.





ROOFTOP UNITS



Evio 19



Evio Ever 27

WHAT IS A **ROOFTOP ?**

A rooftop, as the name suggests, is an HVAC unit located on the roof of a building. A rooftop can be installed on many different types of buildings, such as warehouses, shopping malls, industrial workshops, supermarkets, restaurants. The aim of a rooftop is to provide heated and cooled air to a defined area. The air is distributed through ductwork that define its route.

A rooftop is a compact air handler that is installed externally, and, therefore, designed and constructed to face all the elements. Unlike other HVAC units, a rooftop is self-contained and thus not connected to any other decentralized component. Rooftops represent an easy and simple way of providing air-conditioning: an all-in-one unit with plug and play installation.

Our range of rooftops offers flexibility in terms of design and sizing to be able to answer multiple applications, whether you are looking to equip an existing installation or a new one.

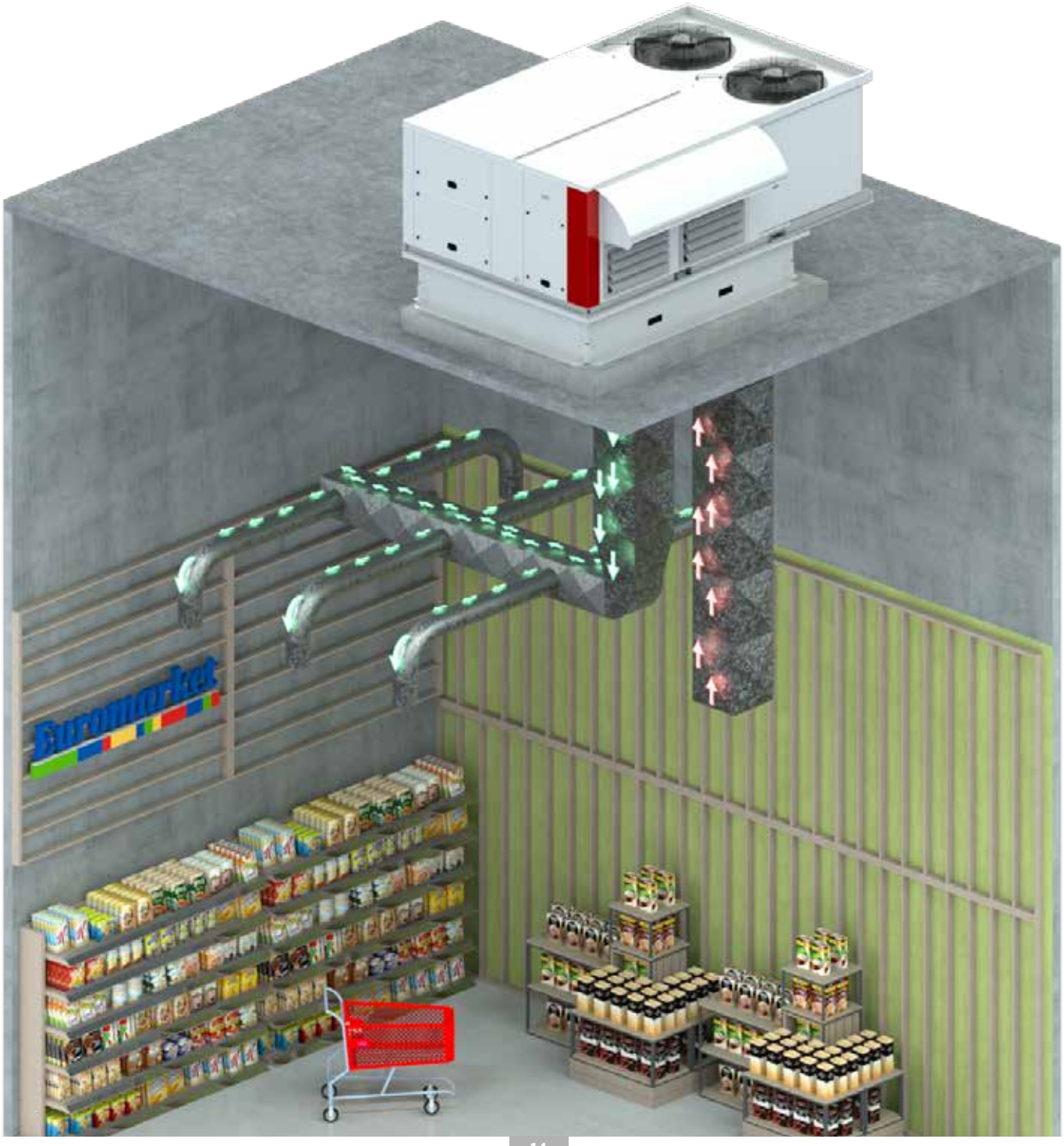

ROOFTOP UNITS

AIR COOLED

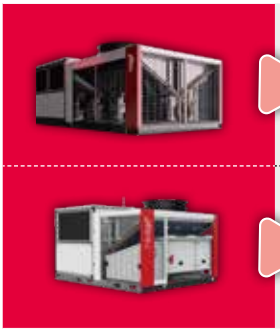

Evio

R32

29 - 250 kW
29 - 247 kW
4000 - 49500 m³/h

Evio Ever

R-290

26 - 65 kW
26 - 65 kW
4000 - 22000 m³/h

Air/Air
Water/Air

Cooling capacity
Heating capacity
Airflow rate

Cafés Restaurants
Non food retail
Food retail

Shopping malls
Storage & Logistics
Industry

■ Standard equipment ● Option

Additional configurations/options are available on request, please contact your sales representative.

		Evio Ev	Evio Ever Ev
CASING	Pre-coated galvanised steel (white)	■	■
	Aluminium steel	■	■
INSULATION	B-S2-d0 (M1) fire proof classification	■	■
	50 mm double-skin	■	■
CONDENSATE DRAIN PAN	Removable drain pan	■	■
	Aluminium drain pan	■	■
AIR FLOW CONFIGURATION	Downflow supply	■	■
	Horizontal supply	●	●
	Upflow supply	●	●
	Downflow return	■	■
	Horizontal return	●	●
	Upflow return	●	●
	100% fresh air	●	●
AIR FILTER	G4	■	■
	Refillable G4	●	●
	M5 (ePM10 50%)	●	●
	F7 (ePM1 50%)	●	●
	F7 (ePM1 50%) bag filter classe A efficiency	●	●
	F9 (ePM1 85%)	●	●
	F9 (ePM1 85%) bag filter classe A efficiency	●	●
AUXILIARY HEATING	Modulating gas burner	●	-
	Natural gas burner	●	-
	Propane gas burner	●	-
	Electric heater (modulating 0-100%)	●	●
	Electric pre-heater (modulating 0-100%)	●	●
	Hot water coil	●	●
ANTI-CORROSION PROTECTION	LenGuard anti-corrosion protection on evaporator coil	●	●
	LenGuard anti-corrosion protection on condenser coil	●	●
	"Urban" anti-corrosion protection fins	■	■
ENERGY RECOVERY	Cross flow plate heat exchanger	●	●
	Rotary wheel heat exchanger	●	●
	Thermodynamic heat recovery	●	●
	eRecovery on food refrigeration systems	●	●
SUPPLY FAN	Direct drive & variable speed centrifugal EC plug fan (low & high pressure)	■	■
CONDENSER	**Air cooled** : Variable speed & low noise axial EC fan	■	■
ECONOMISER	Motorised free-cooling/heating	■	■
EXHAUST	Gravity exhaust damper	●	●
	Centrifugal EC exhaust plug fan (direct drive and variable speed) & gravity damper	●	●
ROOF CURB	Adjustable roof curb	●	●

■ Standard equipment ● Option

Additional configurations/options are available on request, please contact your sales representative.

		Evio Ev	Evio Ever Ev
REFRIGERANT	R32	■	-
	R290	-	■
	Refrigerant leak detection	■	■
	Safety Kit	-	■
COMPRESSOR	Multiscroll	■	-
	Tandem	■	-
	Inverter	-	■
	Soft starter	●	■
	Low noise	●	●
EXPANSION VALVE	Electronic (bi-flow for heat pump)	■	■
CONTROL	eClimatic (programmable controler)	■	■
	Regulation on supply or ambiant temperature	■	■
	7 time zones per day with 4 different operating modes	■	■
	Dirty filter alarm	■	■
	Dynamic defrost	■	■
	Alternate defrost	■	■
	Morning anticipation	■	■
	Dynamic setpoint	■	■
	Variable airflow management of supply fan	■	■
	eFlow airflow rate on display	■	■
	Variable airflow management of condenser fan	■	■
	Economiser power stage & free-cooling/heating	■	■
	Energy recovery module power stage (if energy recovery option)	■	■
	Compressors capacity steps (up to 4)	■	■
	Auxiliary heating capacity steps	■	■
	Intelligent fresh air management (Patent 03 50616)	■	■
COMMUNICATION	Master/Slave operation up to 24 units	●	●
	Smart building management system : e-savyy (up to 16 units)	●	●
	Distance Management System : RedgeCloud connectivity	●	●
	External dry & analogic contacts board	●	●
	ModBus RS485 interface	●	●
	BACnet RS485 interface	●	●
	ModBus & BACnet TCP/IP interface	●	●
DISPLAY INTERFACE	**DC** (comfort display)	●	●
	DM (multi-units display)	●	●
	DS (service display)	●	●
	Touchscreen (display 7")	●	●
CONTROL AND SAFETY DEVICES	Main disconnect switch	■	■
	Smoke detector	●	●
	Fire thermostat	●	●
	Soft starter/Air sock control	●	●
	CO_2 control	●	●
	Humidity control	●	●
	Multi-ambient temperature	●	●
	Variable airflow management/constant pressure	●	●
	Energy meter	●	●

redge

NEXT LEVEL
HVAC SOLUTIONS

redge

EVIO

Air cooled rooftop units



AIR COOLED R32

- 29 - 250 kW
- 29 - 247 kW
- 4000 - 49500 m^3/h

The sizes 225 and 250 are not certified Eurovent due to Airflow Limit.

Redge participates in the ECP programme for RT.
Check ongoing validity of certificate : www.eurovent-certification.com

- **Flexibility** in capacity and airflow rates, ventilation options, energy sources and design (configurations and roof curbs) to best fit your application's needs.
- **Optimized design** and integration of highly efficient components, allowing significant energy savings.
- **Low noise level** thanks to several sound attenuation options available.
- **Installation** and **replacement** made easy thanks to the unit's compactness, same footprint and weight than previous models.

AIR TREATMENT

- EC motor fans ensure a precise temperature for better comfort and energy savings.
- IAQ kits for improved indoor air quality within the building:
  - Media filters (M5/ePM10 50%, F7/ePM1 50%, F9/ePM1 85%).



AIRFLOW

- Several available airflow configurations: top, bottom or horizontal, to fit each building's need.
- Adaptable roof curb to fit the buidling's architecture.
- Frame adaptation for replacement market.

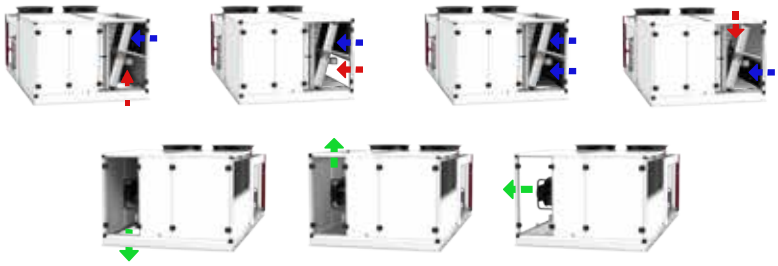

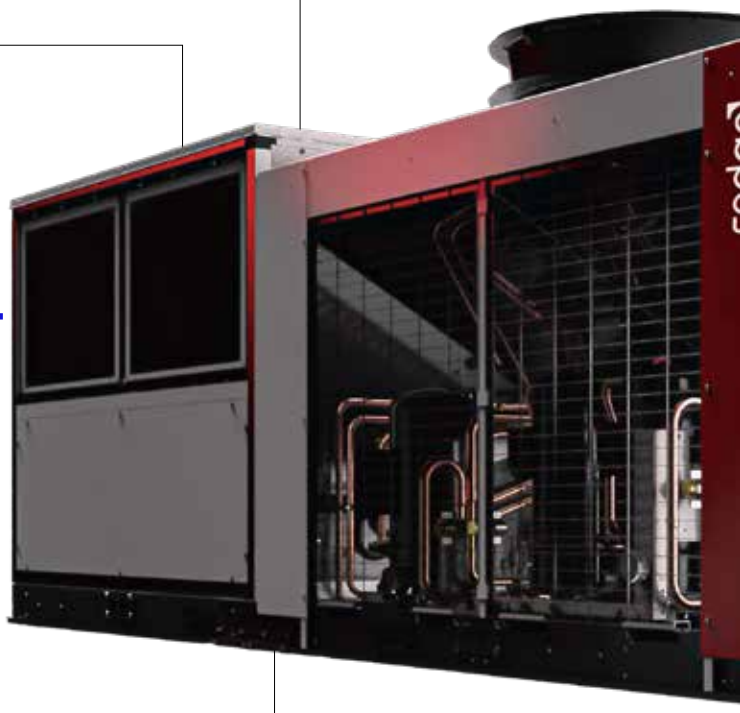

AUXILIARY HEATING DEVICES

- Different options depending on the energy source available on site:
  - Hot water coil.
  - Electric heater.



HEAT RECOVERY

- Water coil recovery, to recover free heat or free cool produced by external water systems climates.
- Plate heat exchanger, to improve the system's efficiency in colder climates by preheating the fresh air stream.
- Heat recovery wheel, with both fresh and return air sections protected by G4 filters.



Photos and illustrations are not contractual.

CASING & DESIGN

New design.
Pre-coated steel panels painted in RAL 9003 color, specially designed for corrosion resistance and to ensure long operation lifetime.
Compact design for perfect integration in its environment.
Same footprint as previous models for plug & play replacement.
Inclined removable drain pan in aluminum for easy disinfecting.
Double skin panels.

THERMODYNAMIC SYSTEM

R32 refrigerant (GWP = 675) enabling a decrease of the carbon dioxide equivalent for potential tax savings.
Tandem scroll compressors allowing capacity modulation.
Variable refrigerant control with electronic expansion valve.
Heat transfer efficiency thanks to new coil design.
Easy access to compressors enabling faster maintenance operations.
Fan with variable speed EC motor and swept blades, enabling control of the high and low floating pressure for optimum operation.
Integrated safety devices for peace of mind.



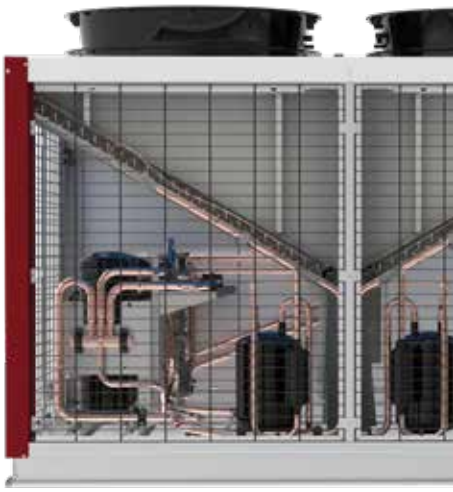

CONTROL

eClimatic electronic controller and intelligent control parameters optimising part-load efficiency.
Integrated communication solutions offering flexibility (master/slave, Modbus, BACnet).
Several display solutions for different access levels.

eCLIMATIC



DS
Service display



Touchscreen display



DC
Comfort display



REMOTE MONITORING

Connectivity through **RedgeCloud** (REDGE WEB PORTAL for Multi sites / Multi units).
BMS through: **e-savvy**





Ev(A) 125(B) A(C) H(D) 055(E) S(F) P(G) F(H) 1(I)

(A) **Ev** = Evio
(B) **B** = Maximum air flow (x 100 m^3/h)
(C) **A** = Air cooled
(D) **H** = Heat pump
(E) **055** = Commercial cooling capacity in kW
(F) **S** = 1 circuit - **D** = 2 circuits
(G) **P** = R32
(H) **F** = Scroll
(I) **1** = Revision

Air cooled version

Heat pump units

		100AH			125AH	185AH			
Evio		**25**	**35**	**45**	**55**	**55**	**60**	**65**	**70**
Nominal thermal performances - Cooling mode									
Cooling capacity (1)	kW	28.60	38.50	45.00	52.60	53.30	58.80	67.00	68.70
Total Power Input	kW	9.32	13.05	15.90	16.91	15.96	20.56	21.68	24.54
EER net (1)		3.07	2.95	2.83	3.11	3.34	2.86	3.09	2.80
Nominal thermal performances - Heating mode									
Heating capacity (2)	kW	29.10	40.90	47.30	53.60	53.40	56.40	66.40	63.40
Total Power Input	kW	7.58	9.78	12.85	14.68	13.09	15.33	19.19	18.17
COP net (2)		3.84	4.18	3.68	3.65	4.08	3.68	3.46	3.49
Seasonal efficiencies - Cooling mode									
Seasonal Energy Efficiency Ratio - **SEER** (3)		4.68	4.78	4.65	4.63	4.98	4.93	4.78	4.88
Seasonal energy efficiency - **ηs,c** (4)	%	184.20	188.20	183.00	182.20	196.20	194.20	188.20	192.20
Eurovent energy efficiency class - Part load operation		B	A	B	B	A	A	A	A
Seasonal efficiencies - Heating mode									
Seasonal Coefficient of Performance - **SCOP** (5)		3.73	4.03	4.05	3.58	3.75	3.88	3.43	3.86
Seasonal energy efficiency - **ηs,h** (6)	%	146.20	158.20	159.00	140.20	147.00	152.00	134.20	151.00
Eurovent energy efficiency class - Part load operation		A	A+	A+	B	A	A+	B	A+
Ventilation data									
Minimum airflow rate	m^3/h	4000	5500	6500	7500	7500	9000	9500	10500
Nominal airflow rate		5000	7000	8000	9500	9500	11000	12000	13000
Maximum airflow rate		10000	10000	10000	12500	18500	18500	18500	18500
Boosted airflow rate		13500	13500	13500	13500	22000	22000	22000	22000
Acoustic data - Standard unit									
Outdoor sound power	dB(A)	75	75	84	79	78	85	85	85
Indoor blower outlet sound power		69	78	82	87	71	75	77	79
Electrical data									
Maximum power	kW	11,2	13,2	23,4	21,2	23,6	47,3	30,4	37
Starting current	A	79,7	81,1	116,4	114,1	118	177,4	162,7	216,4
Maximum current	A	20,2	23	38,5	36,7	40,6	52,5	51,4	59,8
Short circuit current	kA	10	10	10	10	10	10	10	10
Refrigeration circuit									
Number of circuits		1	1	1	2	2	1	2	1
Number of compressors		2	2	2	3	3	2	3	2
Refrigerant load	kg	6,5	10	9,9	6,6/6,6	6,6/6,6	9,6	6,1/6,1	9,3

(1) **Cooling mode :** According to EN14511 nominal conditions - Outdoor temperature 35°C DB - Indoor temperature 27°C DB / 19°C WB
(2) **Heating mode :** According to EN14511 nominal conditions - Outdoor temperature 7°C DB / 6°C WB - Indoor temperature 20°C DB
(3) SEER in accordance with standard EN14825.
(4) Space cooling energy efficiency following Ecodesign regulation EU 2016/2281
(5) SCOP in accordance with standard EN 14825 (average climate conditions).
(6) Space heating energy efficiency following Ecodesign regulation EU 2016/2281.

Ev(A) 125(B) A(C) H(D) 055(E) S(F) P(G) F(H) 1(I)

(A) **Ev** = Evio
(B) **B** = Maximum air flow (x 100 m^3/h)
(C) **A** = Air cooled
(D) **H** = Heat pump
(E) **055** = Commercial cooling capacity in kW
(F) **S** = 1 circuit - **D** = 2 circuits
(G) **P** = R32
(H) **F** = Scroll
(I) **1** = Revision

Air cooled version

Heat pump units

		185AH			270AH					
Evio		**75**	**85**	**95**	**85**	**95**	**105**	**115**	**130**	**145**
Nominal thermal performances - Cooling mode										
Cooling capacity (1)	kW	74.80	83.90	91.20	89.90	94.40	104.30	113.70	122.20	134.80
Total Power Input	kW	25.79	29.75	32.69	28.45	31.16	34.54	39.34	45.26	50.30
EER net (1)		2.90	2.82	2.79	3.16	3.03	3.02	2.89	2.70	2.68
Nominal thermal performances - Heating mode										
Heating capacity (2)	kW	76.50	86.80	94.00	86.60	93.30	103.60	108.40	114.20	133.70
Total Power Input	kW	21.79	25.38	28.66	23.41	25.84	29.10	32.65	37.32	42.04
COP net (2)		3.51	3.42	3.28	3.70	3.61	3.56	3.32	3.06	3.18
Seasonal efficiencies - Cooling mode										
Seasonal Energy Efficiency Ratio - **SEER** (3)		4.73	4.58	4.50	5.03	4.98	4.98	4.95	4.90	4.90
Seasonal energy efficiency - **ηs,c** (4)	%	186.20	180.20	177.00	198.20	196.20	196.20	195.00	193.00	193.00
Eurovent energy efficiency class - Part load operation		A	B	B	A	A	A	A	A	A
Seasonal efficiencies - Heating mode										
Seasonal Coefficient of Performance - **SCOP** (5)		3.83	3.63	3.58	3.85	3.80	3.90	3.80	3.73	3.65
Seasonal energy efficiency - **ηs,h** (6)	%	150.20	142.20	140.20	151.00	149.00	153.00	149.00	146.20	143.00
Eurovent energy efficiency class - Part load operation		A+	A	B	A+	A+	A+	A+	A	A
Ventilation data										
Minimum airflow rate	m^3/h	11000	13000	13500	13000	13500	14000	16000	18000	21500
Nominal airflow rate		14000	16000	17000	16000	17000	19000	21000	24000	27000
Maximum airflow rate		18500	18500	18500	27000	27000	27000	27000	27000	27000
Boosted airflow rate		22000	22000	22000	32500	32500	32500	32500	32500	32500
Acoustic data - Standard unit										
Outdoor sound power	dB(A)	86	88	88	87	88	87	88	88	88
Indoor blower outlet sound power		81	85	88	77	78	81	83	87	92
Electrical data										
Maximum power	kW	40,3	44,3	52,4	50,5	49,6	52,6	58,2	64,2	77,6
Starting current	A	186,2	198,6	206,2	207,3	201,9	200,1	221,8	263,9	286,3
Maximum current	A	66,7	74,1	86,7	82,8	82,4	88,9	97,4	107,7	130,1
Short circuit current	kA	10	10	10	10	10	10	10	10	10
Refrigeration circuit										
Number of circuits		2	2	2	2	2	2	2	2	2
Number of compressors		3	3	3	3	3	4	4	4	4
Refrigerant load	kg	10/10	9,9/9,9	9,7/9,7	10/10	9,9/9,9	10/10	9,7/9,7	9,5/9,7	13/13,1

(1) **Cooling mode :** According to EN14511 nominal conditions - Outdoor temperature 35°C DB - Indoor temperature 27°C DB / 19°C WB
(2) **Heating mode :** According to EN14511 nominal conditions - Outdoor temperature 7°C DB / 6°C WB - Indoor temperature 20°C DB
(3) SEER in accordance with standard EN14825.
(4) Space cooling energy efficiency following Ecodesign regulation EU 2016/2281
(5) SCOP in accordance with standard EN 14825 (average climate conditions).
(6) Space heating energy efficiency following Ecodesign regulation EU 2016/2281.

Ev(A) 125(B) A(C) H(D) 055(E) S(F) P(G) F(H) 1(I)

(A) **Ev** = Evio
(B) **B** = Maximum air flow (x 100 m^3/h)
(C) **A** = Air cooled
(D) **H** = Heat pump
(E) **055** = Commercial cooling capacity in kW
(F) **S** = 1 circuit - **D** = 2 circuits
(G) **P** = R32
(H) **F** = Scroll
(I) **1** = Revision

Air cooled version

Heat pump units

		360AH					
Evio		**115**	**130**	**145**	**160**	**180**	**200**
Nominal thermal performances - Cooling mode							
Cooling capacity (1)	kW	117.10	129.40	139.80	162.10	171.40	193.90
Total Power Input	kW	38.90	44.16	47.71	55.51	62.33	70.00
EER net (1)		3.01	2.93	2.93	2.92	2.75	2.77
Nominal thermal performances - Heating mode							
Heating capacity (2)	kW	106.20	113.50	133.90	159.40	186.90	199.90
Total Power Input	kW	30.96	34.92	38.59	49.81	54.17	58.79
COP net (2)		3.43	3.25	3.47	3.20	3.45	3.40
Seasonal efficiencies - Cooling mode							
Seasonal Energy Efficiency Ratio - **SEER** (3)		5.25	5.20	5.18	5.00	4.78	5.08
Seasonal energy efficiency - **ηs,c** (4)	%	207.00	205.00	204.20	197.00	188.20	200.20
Eurovent energy efficiency class - Part load operation		A+	A+	A+	A	A	A
Seasonal efficiencies - Heating mode							
Seasonal Coefficient of Performance - **SCOP** (5)		3.93	3.88	3.80	3.63	3.98	4.20
Seasonal energy efficiency - **ηs,h** (6)	%	154.20	152.20	149.00	142.20	156.20	165.00
Eurovent energy efficiency class - Part load operation		A+	A+	A+	A	A+	A+
Ventilation data							
Minimum airflow rate	m^3/h	15000	16000	21500	24000	26500	29000
Nominal airflow rate		21000	24000	27000	30000	33000	36000
Maximum airflow rate		36000	36000	36000	36000	36000	36000
Boosted airflow rate		43500	43500	43500	43500	43500	43500
Acoustic data - Standard unit							
Outdoor sound power	dB(A)	88	88	89	91	91	91
Indoor blower outlet sound power		78	81	84	87	91	94
Electrical data							
Maximum power	kW	60,6	66,6	72,2	85,1	102	109,4
Maximum current	A	225,8	267,8	277,9	297,2	326,4	421,8
Starting current	A	101,3	111,6	121,7	141	170,2	180,6
Short circuit current	kA	10	10	10	10	10	10
Refrigeration circuit							
Number of circuits		2	2	2	2	2	2
Number of compressors		4	4	4	4	4	4
Refrigerant load	kg	9,9/9,9	9,5/9,7	13,1/13,1	12,7/12,7	20,9/20,9	20,9/20,3

(1) **Cooling mode :** According to EN14511 nominal conditions - Outdoor temperature 35°C DB - Indoor temperature 27°C DB / 19°C WB
(2) **Heating mode :** According to EN14511 nominal conditions - Outdoor temperature 7°C DB / 6°C WB - Indoor temperature 20°C DB
(3) SEER in accordance with standard EN14825.
(4) Space cooling energy efficiency following Ecodesign regulation EU 2016/2281
(5) SCOP in accordance with standard EN 14825 (average climate conditions).
(6) Space heating energy efficiency following Ecodesign regulation EU 2016/2281.

Ev(A) 125(B) A(C) H(D) 055(E) S(F) P(G) F(H) 1(I)

(A) **Ev** = Evio
(B) **B** = Maximum air flow (x 100 m^3/h)
(C) **A** = Air cooled
(D) **H** = Heat pump
(E) **055** = Commercial cooling capacity in kW
(F) **S** = 1 circuit - **D** = 2 circuits
(G) **P** = R32
(H) **F** = Scroll
(I) **1** = Revision

Air cooled version

Heat pump units

		415AH			
Evio		**180**	**200**	**225**	**250**
Nominal thermal performances - Cooling mode					
Cooling capacity (1)	kW	180.00	194.70	222,2	247,1
Total Power Input	kW	62.07	69.78	81,9	87,3
EER net (1)		2.90	2.79	2,71	2,83
Nominal thermal performances - Heating mode					
Heating capacity (2)	kW	183.00	199.30	222,2	247,1
Total Power Input	kW	51.12	58.27	81,9	87,3
COP net (2)		3.58	3.42	2,71	2,83
Seasonal efficiencies - Cooling mode					
Seasonal Energy Efficiency Ratio - **SEER** (3)		5.10	5.23	5	4,53
Seasonal energy efficiency - **ηs,c** (4)	%	201.00	206.20	197	178
Eurovent energy efficiency class - Part load operation		A	A+	-	-
Seasonal efficiencies - Heating mode					
Seasonal Coefficient of Performance - **SCOP** (5)		4.18	4.30	4,08	3,63
Seasonal energy efficiency - **ηs,h** (6)	%	164.20	169.00	160	142
Eurovent energy efficiency class - Part load operation		A+	A+	-	-
Ventilation data					
Minimum airflow rate	m^3/h	26500	29000	33500	36500
Nominal airflow rate		33000	36000	41500	41500
Maximum airflow rate		41500	41500	41500	41500
Boosted airflow rate		49500	49500	49500	49500
Acoustic data - Standard unit					
Outdoor sound power	dB(A)	91	91	93	93
Indoor blower outlet sound power		91	94	98	93
Electrical data					
Maximum power	kW	102	109,4	122,1	136
Starting current	A	326,4	421,8	443,5	465,2
Maximum current	A	170,2	180,6	202,3	224,1
Short circuit current	kA	10	10	10	10
Refrigeration circuit					
Number of circuits		2	2	2	2
Number of compressors		4	4	4	4
Refrigerant load	kg	21,2/20,9	21,2/20,4	20,5/20,3	20,3/20

(1) **Cooling mode :** According to EN14511 nominal conditions - Outdoor temperature 35°C DB - Indoor temperature 27°C DB / 19°C WB
(2) **Heating mode :** According to EN14511 nominal conditions - Outdoor temperature 7°C DB / 6°C WB - Indoor temperature 20°C DB
(3) SEER in accordance with standard EN14825.
(4) Space cooling energy efficiency following Ecodesign regulation EU 2016/2281
(5) SCOP in accordance with standard EN 14825 (average climate conditions).
(6) Space heating energy efficiency following Ecodesign regulation EU 2016/2281.

Air cooled version

		100AH			125AH	185AH							270AH		
Evio		**025**	**035**	**045**	**055**	**055**	**060**	**065**	**070**	**075**	**085**	**095**	**085**	**095**	**105**
A	mm	2248	2248	2248	2248	2248	2248	2248	2248	2248	2248	2248	2248	2248	2248
B		2909	2909	2909	3916	4468	3461	4468	3461	4468	4468	4468	4468	4468	4468
C		1620	1620	1620	1620	1620	1620	1620	1620	1620	1620	1620	2122	2122	2122
Weight of standard units															
Basic unit	kg	676	705	736	910	1025	891	1068	894	1126	1162	1179	1261	1267	1318

		270AH			360AH						415AH			
Evio		**115**	**130**	**145**	**115**	**130**	**145**	**160**	**180**	**200**	**180**	**200**	**225**	**250**
A	mm	2248	2248	2248	2248	2248	2248	2248	2248	2248	2248	2301	2301	2248
B		4468	4468	5030	5030	5030	5030	5030	5030	5454	5454	5454	5454	5454
C		2122	2301	2122	2122	2301	2301	2301	2301	2301	2301	2248	2248	2301
Weight of standard units														
Basic unit	kg	1366	1544	1496	1518	1681	1811	1922	1974	2063	2089	2114	2204	2204

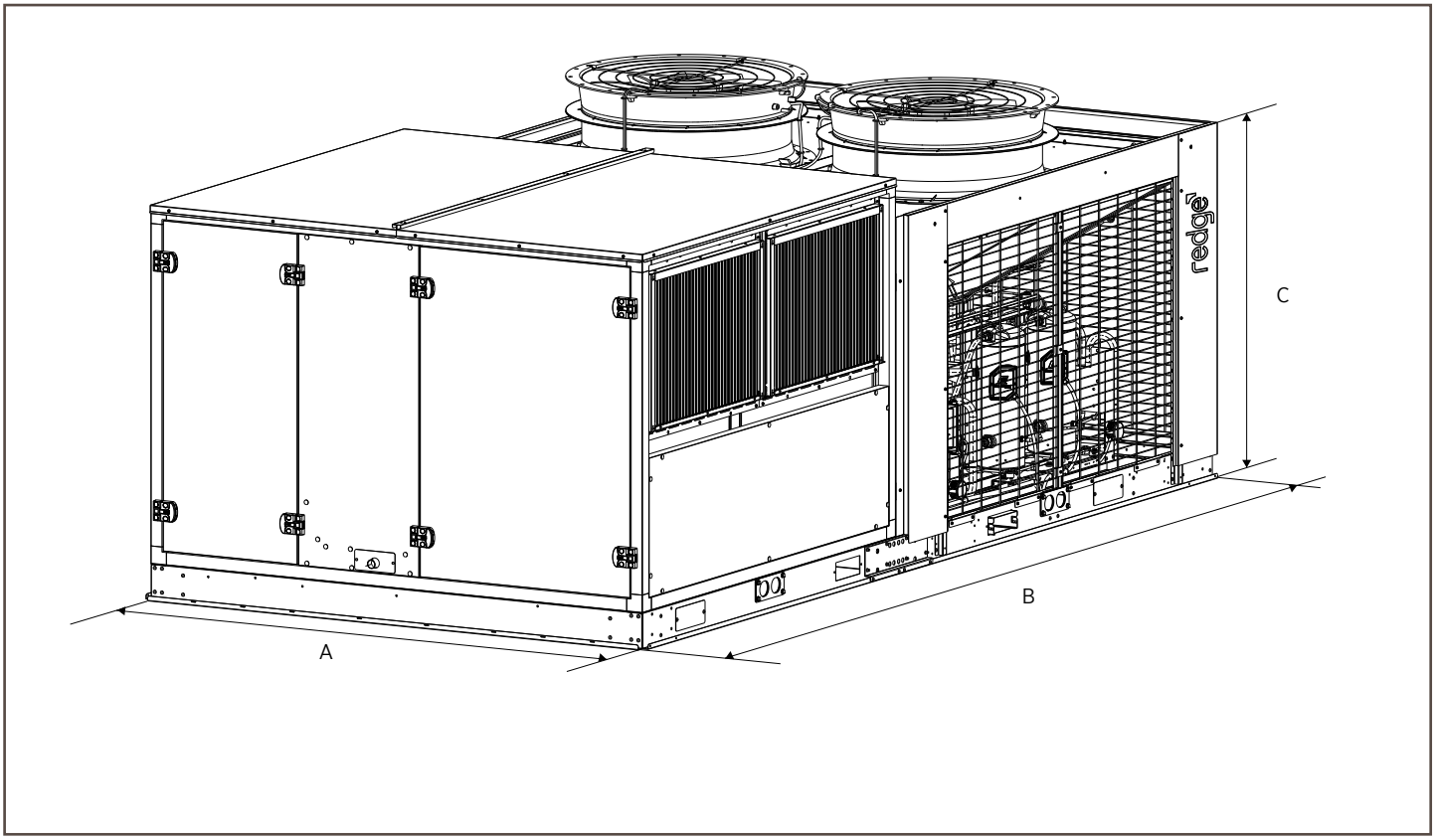

redge

EVIO EVER R290

High Efficiency Self Secure Rooftop unit



PFAS FREE

Inverter

AIR COOLED R-290

- 26 - 65 kW
- 26 - 65 kW
- 4000 - 22000 m^3/h

Redge participates in the ECP programme for RT.
Check ongoing validity of certificate : www.eurovent-certification.com

EUROVENT CERTIFIED PERFORMANCE
www.eurovent-certification.com

Thermodynamic components inside ventilated enclosure
Discharge pressure relief valve with chimney
Optical leak detector sensor in the supply air
Light and noisy alarm
Pressurized electrical cabinet

SELF-SECURE UNIT

Low refrigerant charge, (less than 4 kg per circuit)
Higher Ecodesign performance (Part load)
Compliant with EN378-2
Extended operating limits
Low GWP : 0.02
ODP = 0
PFAS Free (zero impact on health)
Widely available on the market
Cost effective (no patent)
Low pressure refrigerant
Pure refrigerant : No glide
Safety class : A3



AIR TREATMENT

EC motor fans ensure a precise temperature for better comfort and energy savings.
IAQ kits for improved indoor air quality within the building:
- Media filters (M5/ePM10 50% depth 50 or 100mm, F7/ePM1 50%,or F9/ePM1 85% depth 100mm or rigid bag 290mm depth)



AUXILIARY HEATING DEVICES

Different options depending on the energy source available on site:
- Hot water coil.
- Electric heater.



HEAT RECOVERY

Water coil recovery, to recover free heat or free cool produced by external water systems climates.
Plate heat exchanger, to improve the system's efficiency in colder climates by preheating the fresh air stream.
Heat recovery wheel, with both fresh and return air sections protected by G4 filters.



Photos and illustrations are not contractual.

CASING & DESIGN

New design.
Pre-coated steel panels painted in RAL 9003 color, specially designed for corrosion resistance and to ensure long operation lifetime.
Compact design for perfect integration in its environment.
Same footprint as previous models for plug & play replacement.
Inclined removable drain pan in aluminum for easy disinfecting.
Double skin metal sheet panel, 50mm insulation λ = 0.025 W/m.K



THERMODYNAMIC SYSTEM

R290 refrigerant (GWP = 0.02) enabling a decrease of the carbon dioxide equivalent for potential tax savings.
Inverter scroll compressors allowing capacity modulation.
Variable refrigerant control with electronic expansion valve.
Heat transfer efficiency thanks to new coil design.
Easy access to compressors enabling faster maintenance operations.
Fan with variable speed EC motor and swept blades, enabling control of the high and low floating pressure for optimum operation.
Integrated safety devices for peace of mind.

CONTROL

eClimatic electronic controller and intelligent control parameters optimising part-load efficiency.
Integrated communication solutions offering flexibility (master/slave, Modbus, BACnet).
Several display solutions for different access levels.

eCLIMATIC



DS
Service display



Touchscreen display



DC
Comfort display



REMOTE MONITORING

Connectivity through **RedgeCloud** (REDGE WEB PORTAL for Multi sites / Multi units).
BMS through: **e-savvy**





Ev(A) 125(B) A(C) H(D) 040(E) S(F) Y(G) V(H) 1(I)

(A) **Ev** = Evio Ever
(B) **B** = Maximum air flow (x 100 m^3/h)
(C) **A** = Air cooled
(D) **H** = Heat pump
(E) **040** = Commercial cooling capacity in kW
(F) **S** = 1 circuit - **D** = 2 circuits
(G) **P** = R32 - **Y** = R290
(H) Scroll compressor : **S** = On/Off - **V** = Inverter
(I) **1** = Revision

Air cooled version

Heat pump units

		125AH		185AH	
Evio Ever		**040**	**060**	**060**	**070**
Nominal thermal performances - Cooling mode					
Cooling capacity (1)	kW	31,8	44,8	46,8	53,1
Nominal thermal performances - Heating mode					
Heating capacity (2)	kW	34,2	49,2	47,7	55,3
Seasonal efficiencies - Cooling mode					
Seasonal energy efficiency - **ηs,c** (4)	%	193	197	206	194
SEER		4.9	4.97	5.2	4.9
Eurovent energy efficiency class - Part load operation		A	A	A+	A
Seasonal efficiencies - Heating mode					
Seasonal energy efficiency - **ηs,h** (6)	%	138	135	143	136
SCOP		3.54	3.45	3.65	3.48
Eurovent energy efficiency class - Part load operation		B	B	A	B
Ventilation data					
Minimum airflow rate	m^3/h	5000	7000	7500	9000
Nominal airflow rate		7000	9000	11000	12000
Maximum airflow rate		12500	12500	18500	18500
Boosted airflow rate		13500	13500	22000	22000
Acoustic data - Standard unit					
Outdoor sound power	dB(A)	74	78	78	79
Refrigeration circuit					
Number of circuits		1	1	1	1
Number of compressors		1	1	1	1
Refrigerant load	kg	3,00	3,20	3,30	3,30

(1) **Cooling mode :** According to EN14511 nominal conditions - Outdoor temperature 35°C DB - Indoor temperature 27°C DB / 19°C WB
(2) **Heating mode :** According to EN14511 nominal conditions - Outdoor temperature 7°C DB / 6°C WB - Indoor temperature 20°C DB
(3) SEER in accordance with standard EN14825.
(4) Space cooling energy efficiency following Ecodesign regulation EU 2016/2281
(5) SCOP in accordance with standard EN 14825 (average climate conditions).
(6) Space heating energy efficiency following Ecodesign regulation EU 2016/2281.

Air cooled version

		125AH		185AH	
Evio Ever		**040**	**060**	**60**	**70**
A	mm	2248	2248	2248	2248
B		2797	2797	3461	3461
C		1620	1620	2122	2122
Weight of standard units					
Basic unit	kg	768	785	911	927

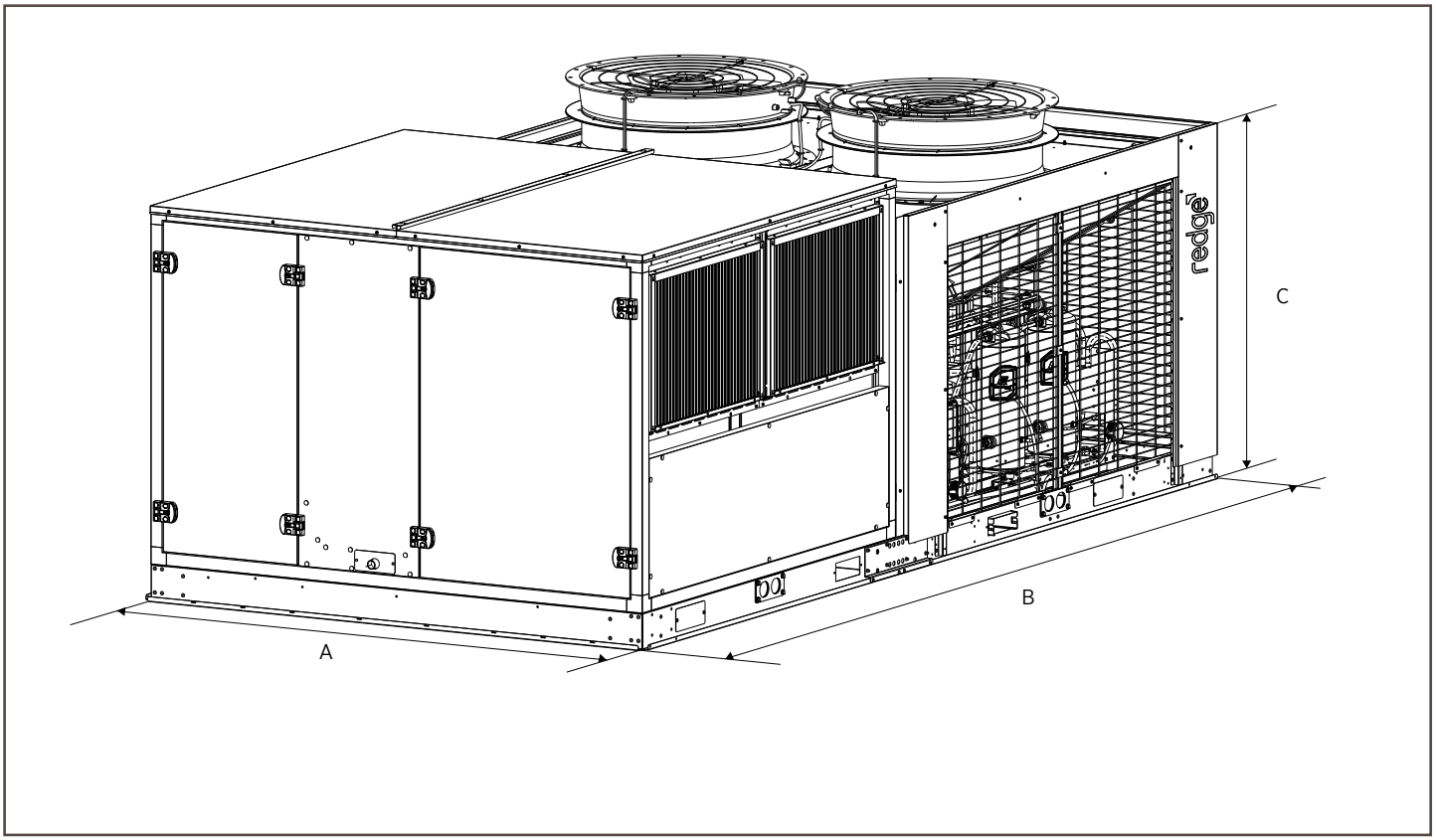

redge

NEXT LEVEL
HVAC SOLUTIONS

HEAT PUMPS & CHILLERS



Elevate Inverter 39



eComfort Inverter 43



eComfort Therma 61



eComfort MC Inverter 67



eProcess Inverter 75

WHAT IS A **HEAT PUMP & CHILLER ?**

Heat pumps and chillers are high-efficiency HVAC systems designed to produce hot or cold water for a wide range of applications, including comfort heating and cooling, as well as industrial processes. These technologies are central to modern energy strategies, offering low-carbon, reliable, and flexible thermal solutions for all types of buildings.

A heat pump generates hot water by extracting renewable energy from the ambient air and transferring it to a water circuit. It is ideal for space heating, domestic hot water production, and low-temperature process applications. Heat pumps provide a sustainable alternative to fossil fuel boilers, with high seasonal performance (SCOP), low-GWP refrigerants such as R-32 or R-290, and significantly reduced CO_2 emissions. They are suitable for use in residential buildings, offices, hotels, hospitals, and industrial facilities, delivering energy-efficient heating through fan coils, underfloor systems, or air handling units.

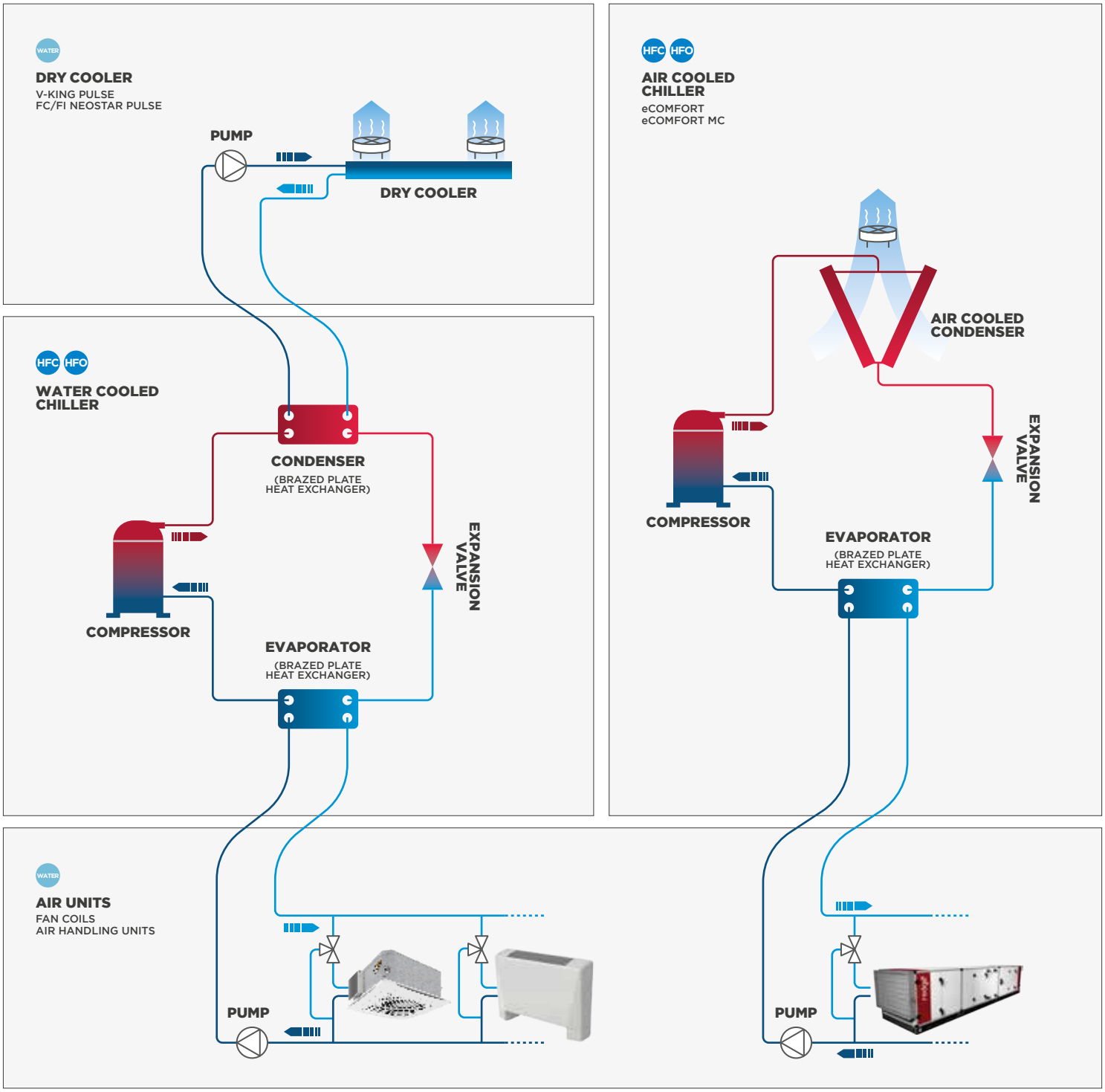

HEAT PUMPS & CHILLERS

AIR / WATER SOURCE



Elevate Inverter

R-290

45 - 60 kW



eComfort Inverter

R32

35 - 210 kW
35 - 210 kW



eComfort MC Inverter

R32

220 - 700 kW



eComfort Therma

R32

220 - 500 kW





eProcess Inverter

R1234ze R515B

310 - 1550 kW

R513A R134a

330 - 1950 kW

R1234ze

280 - 1220 kW

R513A

200 - 1450 kW

Air/Air
Water/Air
Water/Water

Cooling capacity
Heating capacity

Cafés Restaurants
Non food retail
Food retail

Shopping malls
Storage & Logistics
Industry

■ Standard equipment ● Option

Additional configurations/options are available on request, please contact your sales representative.

		eComfort Therma 220-500kW	eComfort 35-210kW	Elevate Propane 45-60kW	eComfort MC 400-700kW	eProcess
REFRIGERANT CIRCUIT	R32	■	■	-	■	-
	R290 Propane	-	-	■	-	-
	R1234ze	-	-	-	-	■
	R513A	-	-	-	-	■
	R134A	-	-	-	-	■
	Winter cooling operation	●	●	●	●	●
	Low leaving water temperature down to -10°C	●	●	●	●	●
SAFETY PACK	Refrigerant leak detection + PRV + acoustic and visual alarms	-	-	■	-	-
COMPRESSOR	Multiscroll	■	■	-	■	-
	Screw	-	-	-	-	■
	Inverter	●	●	■	-	●
	Low noise	●	●	●	●	●
	Super low noise	●	●	●	●	●
EXPANSION VALVE	Thermostatic	-	-	-	-	-
	Electronic	■	■	■	■	■
FAN	AC fan	-	-	-	-	■
	Variable air flow control of condensation : HP floating	■	■	■	■	●
	EC fan	■	■	■	■	●
	Fan static pressure	-	●	●	-	●
AIR COIL	Standard copper tube/aluminium fin (1)	■	■	■	-	●
	Micro channel heat exchanger (2)	-	■	-	■	■
	Heavy anti-corrosion coil treatment	●	●	●	●	●
	Coils protection guards	●	●	●	●	●
HEAT EXCHANGER	Brazed plate heat exchanger	■	■	■	■	-
	Shell and Tube	-	-	-	-	■
ELECTRICAL	Main disconnect switch	■	■	■	■	■
	Phase reversal protection	●	●	●	●	●
	Antifreeze protection	●	●	●	●	●
	Softstarter	●	●	-	●	●
	Water tank modulating auxiliary electrical heater (heat pump)	●	●	-	-	-
	Power factor correction	●	●	-	●	-
	Energy meter	●	●	●	●	●
HYDRAULIC MODULE	Paddle flow switch	■	■	■	■	●
	Electronic flow switch	-	-	-	-	●
	Water filter	●	●	●	●	●
	Flange connection	●	●	●	●	-
	Water tank	●	●	●	●	-
	Low-pressure single pump	●	●	●	●	●
	Low-pressure twin pump	●	●	●	●	●
	High-pressure single pump	●	●	●	●	●
	High-pressure twin pump	●	●	●	●	●
	eDrive high-pressure single pump (variable primary flow)	●	●	●	●	●
	eDrive high-pressure twin pump (variable primary flow)	●	●	●	●	●
	By-pass valve for Delta P control (eDrive)	●	●	●	●	-

(1) Reversible heat pump units.
(2) Cooling only units.

■ Standard equipment ● Option

Additional configurations/options are available on request, please contact your sales representative.

		eComfort Therma 220-500kW	eComfort R32 35-210kW	Elevate Propane 45-60kW	eComfort MC 400-700kW	eProcess
CONTROL AND COMMUNICATION	Modbus RS485 communication interface	●	●	●	●	●
	BACnet MSTP communication interface	●	●	●	●	●
	Modbus/BACnet/Ethernet TCP/IP communication interface	●	●	●	●	●
	Basic display	-	-	-	-	●
	Advanced display	■	■	■	■	■
	Service display	●	●	●	●	●
	Remote comfort display	●	●	●	●	●
	Extension board for aditional input /output	●	●	●	●	●
	Distance Management System : RedgeCloud connectivity	●	●	●	●	●
	Distance Management System : RedgeOneWeb, ...	●	●	●	●	●
ENERGY SAVING	Partial heat recovery	●	●	-	●	●
	Total heat recovery	-	-	-	●	●
	Free-cooling	-	-	-	●	-
MISCELLANEOUS	Rubber anti-vibration mounts	●	●	●	●	-
	Spring anti-vibration mounts	-	-	-	-	●
PACKING	Truck packaging for long distance	●	●	●	●	●
	Container packing	●	●	-	●	●

redge

NEXT LEVEL
HVAC SOLUTIONS

redge

New !

Elevate

Reversible Propane Heat pump



PFAS FREE

R-290

NOMINAL CAPACITY

45 - 65 kW

MODULAR CAPACITY

up to 520 kW

Redge participates in the ECP programme for LCP-HP.
Check ongoing validity of certificate : www.eurovent-certification.com

EUROVENT CERTIFIED PERFORMANCE
www.eurovent-certification.com

One solution, all applications: full inverter, compact and reliable heat pumps

Delivers high temperatures with outstanding efficiency and intelligent control

Built for safety: Market leading safety pack with advanced ATEX components, trusted in the field

SAFETY PACKAGE

External Electrical Cabinet External:
Electrical cabinet outside the refrigerant circuit zone, compliant with safety regulations, making maintenance faster and safer for technicians.
ATEX-Certified Leak Detector:
Propane (R290) leaks continuous monitoring, with instant safety protocols start preventing hazardous concentrations and protecting people.
Pressure Relief Valve:
Critical safety component, automatically discharging excess refrigerant pressure to ensure safe & reliable operation under all conditions.
Visual & Acoustic alarm:
Leak two-level alarm safety system : visual & acoustic activated in case of alert, ensuring safe intervention in ATEX environments.
ATEX-Certified Exhaust Fan:
Automatically activated when a leak is detected, safely extracting flammable gases and minimizing ignition risk for a safe operating environment.
Water/Refrigerant Separator:
Ensuring complete isolation, preventing any risk of refrigerant mixing with water, guaranteeing operational safety.
SIL2-certified safety chain: guaranteeing the highest level of reliability and protection.

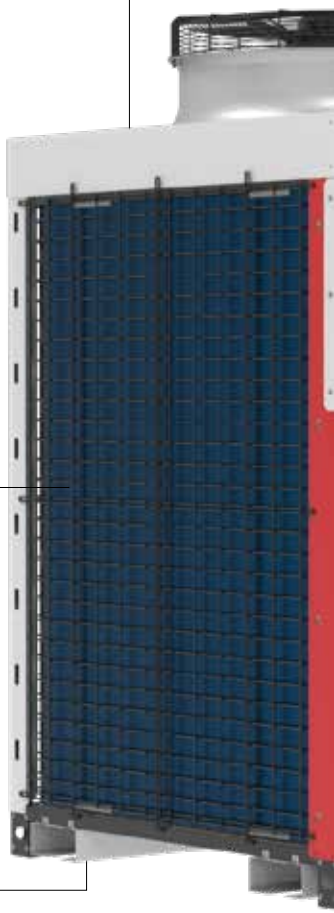

eDRIVE

Variable speed drive pump option, which modulates the water flow through the plate heat exchanger and reduces energy costs:

Saves energy consumption especially at part-load conditions and during off period, reaching up to 75% reduction of the pump consumption.
Savings on the initial system cost, due to fewer pumps and piping connections than primary-secondary systems.
Flexibility and accuracy of the pump operation control: smooth start and stop, gradual change of speed, accuracy and stability of control.
Reduction of the repeated stress on the pump and piping resulting in longer equipment lifetime.
Elimination of the start-up current thanks to variable frequency drive that controls a gradual pump motor supply.





CONTROL

eClimatic electronic controller and intelligent control parameters optimising part-load efficiency.
Integrated communication solutions offering flexibility (master/slave, Modbus, BACnet).
DC Advanced display, equipped with a graphic screen providing access to the main user parameters, with two optional displays:
- Remote Display
- Service Display

eCLIMATIC



DC Advanced



ACOUSTIC COMFORT

Three different noise level configurations available:

Quiet operation (standard), achieved with compact design, silent compressors and pumps, and with high-performance propeller fans, all installed in a closed box.
Low noise level option: High performance acoustic compressor casing can halve the noise produced by the unit.
Active Acoustic Attenuation System with variable fan speed allows progressive adaptation of the unit to the building load while respecting the noise level constraints and the operating limits (as an option).



CASING & DESIGN

Casing made of white painted galvanised steel.
Compact design.
All thermodynamic and hydraulic components installed below the coils.

THERMODYNAMIC SYSTEM

High-efficiency coil design for faster heating response and long-term reliability
Stainless steel brazed plate heat exchanger for optimal transfer in low-temperature systems
EC fans for silent, adaptive airflow with ultra-low energy consumption
Inverter compressor that adapts to any condition, delivering stable heating, cooling, and DHW (even in coldest climates)

SMART MONITORING & TOTAL CONTROL WITH REDGE CLOUD

Complete Remote Monitoring: Access and manage all your heat pumps units, no matter their location or condition, from a single intuitive platform.
Comprehensive Multi-Unit Management: Centralized access to data from multiple installations, giving you a bird's-eye view of your entire operation, streamlining your maintenance efforts.
Customizable Dashboard to make your life easiest.
User-Friendly Interface: A self-explanatory, easy-to-navigate dashboard ensures you get the insights you need with minimal effort—just a glance is enough to stay on top of everything.
Real-Time Data at Your Fingertips: Effortlessly monitor critical heat pump parameters such as Inlet & Outlet temperatures, outdoor temperature, system status (ON/OFF), generic and safety alarms.



Photos and illustrations are not contractual.

Y(A) B(B) H(C) 45(D) S(E) Y(F) 1(G) M(H)

(A) **Y** = Elevate
(B) **B** = Inverter compressor
(C) **H** = Heating optimized
(D) **45** = Approximate power in kW
(E) **S** = Single circuit
(F) **Y** = Refrigerant Propane
(G) **1** = Revision number
(H) **M** = 400V/3/50Hz

Elevate - YBH				45	60
Heating mode					
Standard unit Full load performances *	HM1	Nominal capacity 30/35°C	kW	44,2	63,1
		COP 30/35°C	kW/kW	3,68	3,43
	HM2	Nominal capacity 40/45°C	kW	42,3	60,3
		COP 40/45°C	kW/kW	3,07	2,9
	HM3	Nominal capacity 47/55°C	kW	40,6	57,8
		COP 47/55°C	kW/kW	2,6	2,49
	HM4	Nominal capacity 55/65°C	kW	39,2	55,7
		COP 55/65°C	kW/kW	2,19	2,12
Seasonal energy efficiency **	HM1	SCOP 30/35°C	kWh/kWh	4,13	4,13
		ηs heat 30/35°C	%	162	162
		Energy label		A++	A++
	HM2	SCOP 40/45°C	kWh/kWh	3,56	3,57
		ηs heat 40/45°C	%	139,3	139,7
	HM3	SCOP 47/55°C	kWh/kWh	3,23	3,18
		ηs heat 47/55°C	%	126	124
		Energy label		A++	A++
	HM4	SCOP 55/65°C	kWh/kWh	2,90	2,78
		ηs heat 55/65°C	%	113	108
Cooling mode					
Standart unit Full load performances *	CM1	Nominal capacity 12/7°C	kW	38,9	50,4
		EER 12/7°C	kW/kW	2,77	2.67
	CM2	Nominal capacity 23/18°C	kW	53,3	69,4
		EER 23/18°C	kW/kW	3,6	3,5
	CM3	Nominal capacity -2/-8°C	kW	22,2	28,6
		EER -2/-8°C	kW/kW	1,72	1,63
Seasonal energy efficiency **		SEER 12/7°C	kWh/kWh	4,9	4,75
		ηs cool 12/7°C	%	193	187
		SEER 23/18°C	kWh/kWh	6,61	6,32
		SEPR 12/7°C	kWh/kWh	6,64	6,43
		SEPR -2/-8°C	kWh/kWh	3,80	3,75
Sound levels - Standard unit					
Sound power in heating mode① - Standard unit			dB(A)	80,6	83,8
Sound pressure in heating mode at 10 m② - Standard unit			dB(A)	48,7	51,9
Sound levels - Standard unit + LNCJ option③			dB(A)	74,9	78,6
Dimensions - Standard unit					
Length			mm	1350	1350
Width			mm	1593	1593
Height			mm	2120	2120
Operating weight ⑥					
Standard unit			kg	411	500
Standard unit + LNCJ③			kg	417	508
Standard unit + LNCJ③ + WTG④ + DPEH⑤			kg	609	710

*	In accordance with standard EN14511-3:2022.
**	In accordance with standard EN14825:2022, average climate
①	Standard EN 12102-1
②	Standard EN 12102-1, ISO 3744 enveloping surface calculation method
③	Option: LNCJ = Low noise
④	Option: WTG = Water Tank (100l)
⑤	Option: DPEH = Hydraulic module with eDrive high-pressure twin pump
⑥	Values are guidelines only. Refer to the unit name plate.
dbT	Dry bulb temperature
wbT	Wet bulb temperature
BPHE	Brazed plate heat exchanger

redge

eComfort & eComfort Advanced

Air source Heat pumps / Chillers





R32

FIX SPEED - AIR SOURCE

35 - 210 kW

35 - 210 kW

R32

ADVANCED - AIR SOURCE

40 - 210 kW

40 - 210 kW

Redge participates in the ECP programme for LCP-HP.
Check ongoing validity of certificate : www.eurovent-certification.com

- **Fast and easy installation and commissioning** thanks to the integration of a complete hydraulic module with buffer tank and immersed heating rods.
- Compact and discreet design **for perfect architectural integration**.
- Outstanding **seasonal SCOP efficiencies**, exceeding the European EcoDesign 2017 requirements for heating applications.
- **Excellent SEPR seasonal energy efficiencies**, which exceed the European EcoDesign 2021 requirements regarding high-temperature process cooling.
- **Precise water temperature control** in heating and cooling modes thanks to highly efficient components.

THERMODYNAMIC SYSTEM

- Extended operating map to match most market requirements
- New heat exchanger and latest generation components to provide high efficiency and the best Total Cost of Ownership (TCO) of the market
- R32 refrigerant (GWP = 675) enabling a decrease of the refrigerant load (-30%) and of the unit's carbon footprint (-75% TeqCO2)
- Desuperheater (as an option): additional plate heat exchanger on each circuit to recover the rejected heat and provide free hot water for sanitary or industrial purposes



INVERTER COMPRESSOR

The heating and cooling demand is precisely adapted to the needs :

- Optimized design for compact footprint, including water tank (as an option)
- The control of the outlet water temperature is perfect.
- Buffer tank requirements in case of low water volume or fast variable heat load are reduced.



Inverter

R32 is an obvious choice to replace R410A. It already makes up 50% of its composition, and it has a number of other key advantages:

- **low GWP: 675**
- **low cost**
- **pure substance**
- **many providers due to no patent**

Photos and illustrations are not contractual.

EC STANDARD FANS

Intelligent noise attenuation management thanks to:
Acoustic compressor jacket
High efficiency EC fans
A further increase in energy savings through improved seasonal efficiencies (floating HP).
Year-round operation down to -20 °C outdoor temperature in cooling mode.
Year-round operation up to 30 °C outdoor temperature in heating mode (heat pump).
Intelligent noise attenuation management, programmable night and day, combined with acoustic covers.



TOTAL MODULATION

The eCOMFORT range benefits from the **latest technologies** to achieve **very high seasonal efficiencies**
Refrigerant : thanks to a very high efficiency variable speed compressor with permanent magnet motor,
Air : with high-efficiency EC fans with “Owlet” type blades and high performance integrated diffusers to improve airflow efficiency,
Water : thanks to the variable speed inverter of the water pump.
The integrated control management (ModBus / BACnet / Ethernet TCP / IP communication interface / Redge Cloud as an option) offers a turnkey control solution.



eDRIVE

Variable speed drive pump option, which modulates the water flow through the plate heat exchanger and reduces energy costs:
Saves energy consumption especially at part-load conditions and during off period, reaching up to 75% reduction of the pump consumption.
Savings on the initial system cost, due to fewer pumps and piping connections than primary-secondary systems.
Flexibility and accuracy of the pump operation control: smooth start and stop, gradual change of speed, accuracy and stability of control.
Reduction of the repeated stress on the pump and piping resulting in longer equipment lifetime.
Elimination of the start-up current thanks to variable frequency drive that controls a gradual pump motor supply.







- **Fast and easy installation and commissioning** thanks to the integration of a complete hydraulic module with buffer tank and immersed heating rods.
- Compact and discreet design **for perfect architectural integration**.
- Outstanding **seasonal SCOP efficiencies**, exceeding the European EcoDesign 2017 requirements for heating applications.
- **Excellent SEPR seasonal energy efficiencies**, which exceed the European EcoDesign 2021 requirements regarding high-temperature process cooling.
- **Precise water temperature control** in heating and cooling modes thanks to highly efficient components.

CONTROL

- eClimatic electronic controller and intelligent control parameters optimising part-load efficiency.
- Integrated communication solutions offering flexibility (master/slave, Modbus).
- DC Advanced display, equipped with a graphic screen providing access to the main user parameters, with two optional displays:
  - Remote Display
  - Service Display

eCLIMATIC



DC Advanced





CASING & DESIGN

- Casing made of white painted galvanised steel.
- Compact design, perfect for architectural integration.
- All thermodynamic and hydraulic components installed inside the box.
- Unit designed with reduced height for discreet installation on a roof or on the ground (up to 1.7m), without the need for a peripheral screen.
- Optimized design for compact footprint, including water tank (as an option)

ACOUSTIC COMFORT

Three different noise level configurations available:

- **Quiet operation** (standard), achieved with compact design, silent compressors and pumps, and with high-performance propeller fans, all installed in a closed box.
- **Low noise level option**: High performance acoustic compressor jacket can have the noise produced by the unit.
- **Active Acoustic Attenuation System** with variable fan speed allows progressive adaptation of the unit to the building load while respecting the noise level constraints and the operating limits (as an option).

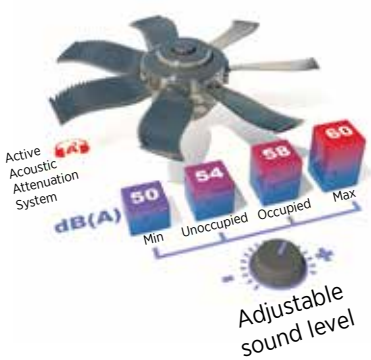

Photos and illustrations are not contractual.

REMOTE MONITORING

Connectivity through **RedgeCloud**
BMS through: **e-savvy**









THERMODYNAMIC SYSTEM

Multi-scroll compressors, mounted in tandem or trio, to provide the best seasonal efficiencies.
Aluminium microchannel condenser coil on cooling only units.
Large surface exchangers built with copper tubing and aluminium fins on heat-pump units.
High performance propeller fans with profiled blades to improve efficiency and reduce noise level (EC version in standard).
Thermally insulated and frost-protected water heat exchangers made from stainless steel plates with copper brazing.
One or two independent circuits, each equipped with electronic expansion valves.
R32 refrigerant (GWP = 675) enabling a decrease of the refrigerant load (-30%) and of the unit's carbon footprint (-75% TeqCO2)
Desuperheater (as an option): additional plate heat exchanger on each circuit to recover the rejected heat and provide free hot water for sanitary or industrial purposes.





INTEGRATED HYDRAULIC MODULE

Enables Plug & Play installation and reduced footprint
Available with eDrive technology (inverter) to reduce operation costs

G(A) A(B) H(C) 035(D) S(E) P(F) 1(G) M(H)

(A) **G** = eComfort
(B) **A** = Standard Air source unit - **B** = Advanced Air source unit
(C) **C** = Cooling only unit - **H** = Heat pump unit
(D) **035** = Approximate power in kW
(E) **S** = Single circuit - **D** = Double circuit
(F) **P** = Refrigerant R32
(G) **1 or 2** = Revision number
(H) **M** = 400V/3/50Hz

Air source version

Heat pumps units

eCOMFORT - GAH				035S	040S	045S	050S	055S	060S
Nominal thermal performances - Cooling mode									
Cooling capacity (1)			kW	37,7	41,2	46,9	50,5	56,1	63,2
Total absorbed power (1)			kW	13,2	14,2	16,5	17,7	19,0	22,0
EER (1)				2,9	2,9	2,9	2,9	3,0	2,9
Comfort Application	**Standard Fans**	Seasonal Energy Efficiency Ratio (2) **SEER**		4.21	4.48	4.26	4.33	4.18	4.18
		Seasonal energy efficiency (3) **ηs,c**	%	165	176	167	170	164	164
Process Application		Seasonal Energy Performance Ratio (4) **SEPR** - High temperature (7°C)		6.03	6.58	5.58	5.59	5.5	5.43
		Seasonal Energy Performance Ratio (5) **SEPR** - Medium temperature (-8°C)		3.41	3.52	3.55	3.5	3.56	3.52
Nominal thermal performances - Heating mode									
Heating capacity (1)			kW	39,1	42,1	48,4	52,2	56,6	64,3
Total absorbed power (1)			kW	13,2	14,1	15,9	17,5	18,9	21,8
COP (1)				2,95	2,99	3,05	2,99	2,99	2,95
Comfort Application	**Standard Fans**	Seasonal Coeficient of Performance (6) **SCOP**		3,46	3,54	3,57	3,56	3,54	3,54
		Seasonal energy efficiency (7) **ηs,h**	%	136	139	140	140	139	139
Acoustic data									
Global sound power level - Standard unit			dB(A)	75,3	75,3	73,5	74,7	77,1	81,3
Electrical data									
Maximum power			kW	16.9	18.9	20.7	22.4	25.4	28.8
Maximum current			A	28.8	31.1	35.4	38.2	42.8	47.5
Starting current			A	98.8	108.5	146.7	157.7	162.4	164.4
Short circuit current			kA	10,0	10,0	10,0	10,0	10,0	10,0
Refrigeration circuit									
Number of circuits				1	1	1	1	1	1
Number of compressors				2	2	2	2	2	2
Total refrigerant load - R32			kg	5,2	5,8	6,3	7,5	7,6	9,0
Evaporator									
Nominal water flow rate			m^3/h	6,5	7,1	8,1	8,7	9,7	10,9
Nominal pressure drop			kPa	37,4	31,9	29,9	34,5	34,1	32,7
Hydraulic connection									
Type				Threaded male					
Diameter				1"1/2	1"1/2	1"1/2	1"1/2	1"1/2	1"1/2

(1) EUROVENT certified data, in accordance with standard EN 14511.
Cooling mode: Evaporator water temperature = 12/7°C | Outdoor air temperature = 35°C / **Heating mode:** Condenser water temperature = 40/45°C | Outdoor air temperature = 7°C
(2) SEER in accordance with standard EN 14825. | **(3)** Following ecodesign regulation EU 2016/2281 on space cooling, normalized leaving water temperature at 7°C, in accordance with standard EN 14825. | **(4)** Following ecodesign regulation EU 2016/2281 on process cooling units, normalized leaving water temperature at 7°C, in accordance with standard EN 14825. | **(5)** Following ecodesign regulation EU 2015/1095 on process cooling chillers, normalized leaving water temperature at -8°C, in accordance with standard EN 14825 | **(6)** SCOP in accordance with standard EN 14825. Heating mode performance is defined for average climate conditions. | **(7)** Following ecodesign regulation EU 813/2013 on space heaters, normalized leaving water temperature at 7°C, in accordance with standard EN 14825, average climate conditions. | **(8)** Following energy labelling regulation EU 811/2013 on space heaters.

G(A) A(B) H(C) 035(D) S(E) P(F) 1(G) M(H)

(A) **G** = eComfort
(B) **A** = Standard Air source unit - **B** = Advanced Air source unit
(C) **C** = Cooling only unit - **H** = Heat pump unit
(D)**035** = Approximate power in kW
(E) **S** = Single circuit - **D** = Double circuit
(F) **P** = Refrigerant R32
(G) **1 or 2** = Revision number
(H) **M** = 400V/3/50Hz

Air source version

Heat pumps units

eCOMFORT - GAH				065S	070S	080S	095S	110S	115S	125S
Nominal thermal performances - Cooling mode										
Cooling capacity (1)			kW	64,3	69,6	84,7	94,1	105,3	118,0	126,4
Total absorbed power (1)			kW	20,8	23,1	27,7	30,9	36,4	39,4	42,7
EER (1)				3,09	3,02	3,06	3,05	2,90	2,99	2,96
Comfort Application	**Standard Fans**	Seasonal Energy Efficiency Ratio (2) **SEER**		4,56	4,53	4,46	4,56	4,60	4,39	4,62
		Seasonal energy efficiency (3) **ηs,c**	%	179	178	175	180	181	173	182
Process Application		Seasonal Energy Performance Ratio (4) **SEPR** - High temperature (7°C)		5,78	5,69	5,82	5,81	5,73	5,59	5,65
		Seasonal Energy Performance Ratio (5) **SEPR** - Medium temperature (-8°C)		3,56	3,54	3,70	3,64	3,66	3,66	3,69
Nominal thermal performances - Heating mode										
Heating capacity (1)			kW	64,9	70,4	84,9	94,8	106,7	117,5	126,1
Total absorbed power (1)			kW	20,4	23,0	26,8	30,1	33,9	38,9	40,7
COP (1)				3,18	3,06	3,17	3,15	3,15	3,02	3,10
Comfort Application	**Standard Fans**	Seasonal Coeficient of Performance (6) **SCOP**		3,65	3,63	3,63	3,59	3,61	3,58	3,73
		Seasonal energy efficiency (7) **ηs,h**	%	143	142	142	141	141	140	146
Acoustic data										
Global sound power level - Standard unit			dB(A)	80,9	82,5	85,1	86,8	87,3	88,6	87,1
Electrical data										
Maximum power			kW	28.4	31	37.1	41.6	47.2	54.3	57.4
Maximum current			A	47.2	52.8	63.1	69.4	78.7	88.5	96.9
Starting current			A	164	209	219.3	273.5	320.5	330.4	253.1
Short circuit current			kA	10,0	10,0	10,0	10,0	10,0	10,0	10,0
Refrigeration circuit										
Number of circuits				1	1	1	1	1	1	1
Number of compressors				2	2	2	2	2	2	3
Total refrigerant load - R32			kg	10,0	10,5	11,5	15,0	15,5	15,5	18,0
Evaporator										
Nominal water flow rate			m^3/h	11,1	12,0	14,6	16,2	18,2	20,4	21,8
Nominal pressure drop			kPa	33,7	39,3	39,2	47,5	36,3	44,7	33,9
Hydraulic connection										
Type				Victaulic						
Diameter				2"	2"	2"	2 1/2"	2 1/2"	2 1/2"	2 1/2"

(1) EUROVENT certified data, in accordance with standard EN 14511.
Cooling mode: Evaporator water temperature = 12/7°C | Outdoor air temperature = 35°C / **Heating mode:** Condenser water temperature = 40/45°C | Outdoor air temperature = 7°C
(2) SEER in accordance with standard EN 14825. | **(3)** Following ecodesign regulation EU 2016/2281 on space cooling, normalized leaving water temperature at 7°C, in accordance with standard EN 14825. | **(4)** Following ecodesign regulation EU 2016/2281 on process cooling units, normalized leaving water temperature at 7°C, in accordance with standard EN 14825. | **(5)** Following ecodesign regulation EU 2015/1095 on process cooling chillers, normalized leaving water temperature at -8°C, in accordance with standard EN 14825 | **(6)** SCOP in accordance with standard EN 14825. Heating mode performance is defined for average climate conditions. | **(7)** Following ecodesign regulation EU 813/2013 on space heaters, normalized leaving water temperature at 7°C, in accordance with standard EN 14825, average climate conditions. | **(8)** Following energy labelling regulation EU 811/2013 on space heaters.

G(A) A(B) H(C) 035(D) S(E) P(F) 1(G) M(H)

(A) **G** = eComfort
(B) **A** = Standard Air source unit - **B** = Advanced Air source unit
(C) **C** = Cooling only unit - **H** = Heat pump unit
(D) **035** = Approximate power in kW
(E) **S** = Single circuit - **D** = Double circuit
(F) **P** = Refrigerant R32
(G) **1 or 2** = Revision number
(H) **M** = 400V/3/50Hz

Air source version

Heat pumps units

eCOMFORT - GAH				140S	110D	125D	140D	160D	185D	210D
Nominal thermal performances - Cooling mode										
Cooling capacity (1)			kW	152,0	108,6	125,3	140,3	166,1	187,3	209,1
Total absorbed power (1)			kW	54,8	38,4	43,3	48,4	55,1	62,5	73,0
EER (1)				2,78	2,83	2,89	2,90	3,01	3,00	2,86
Comfort Application	**Standard Fans**	Seasonal Energy Efficiency Ratio (2) **SEER**		4,36	4,56	4,42	4,49	4,62	4,56	4,49
Comfort Application	**Standard Fans**	Seasonal energy efficiency (3) **ηs,c**	%	171	179	174	177	182	179	176
Process Application	**Standard Fans**	Seasonal Energy Performance Ratio (4) **SEPR** - High temperature (7°C)		5,31	5,64	5,40	5,36	5,73	5,49	5,27
Process Application	**Standard Fans**	Seasonal Energy Performance Ratio (5) **SEPR** - Medium temperature (-8°C)		3,65	3,78	3,70	3,72	3,82	3,76	3,67
Nominal thermal performances - Heating mode										
Heating capacity (1)			kW	154,5	114,1	129,3	142,5	170,7	190,3	216,1
Total absorbed power (1)			kW	52,9	35,4	41,4	45,9	53,3	61,1	73,0
COP (1)				2,92	3,22	3,12	3,11	3,20	3,12	2,96
Comfort Application	**Standard Fans**	Seasonal Coeficient of Performance (6) **SCOP**		3,70	3,78	3,76	3,79	3,78	3,74	3,71
Comfort Application	**Standard Fans**	Seasonal energy efficiency (7) **ηs,h**	%	145	148	147	148	148	147	145
Acoustic data										
Global sound power level - Standard unit			dB(A)	90,3	78,7	84,3	86,8	88,1	90,1	90,6
Electrical data										
Maximum power			kW	72.4	48.1	57.6	64.5	74.1	88.3	99.5
Maximum current			A	117.5	81.8	95	108.6	126	145.8	164.5
Starting current			A	321.7	201.3	211.8	264.8	282.2	350	406.3
Short circuit current			kA	10,0	10,0	10,0	10,0	10,0	10,0	10,0
Refrigeration circuit										
Number of circuits				1	2	2	2	2	2	2
Number of compressors				3	2+2	2+2	2+2	2+2	2+2	2+2
Total refrigerant load - R32			kg	18,3	17,8	19,0	20,0	26,0	26,2	26,4
Evaporator										
Nominal water flow rate			m^3/h	26,2	18,7	21,6	24,2	28,6	32,3	36,1
Nominal pressure drop			kPa	47,6	19,6	25,4	20,6	28,1	31,0	38,1
Hydraulic connection										
Type				Victaulic or Welded						
Diameter				2 1/2"	2 1/2"	2 1/2"	2 1/2"	3"	3"	3"

(1) EUROVENT certified data, in accordance with standard EN 14511.
Cooling mode: Evaporator water temperature = 12/7°C | Outdoor air temperature = 35°C / **Heating mode:** Condenser water temperature = 40/45°C | Outdoor air temperature = 7°C
(2) SEER in accordance with standard EN 14825. | **(3)** Following ecodesign regulation EU 2016/2281 on space cooling, normalized leaving water temperature at 7°C, in accordance with standard EN 14825. | **(4)** Following ecodesign regulation EU 2016/2281 on process cooling units, normalized leaving water temperature at 7°C, in accordance with standard EN 14825. | **(5)** Following ecodesign regulation EU 2015/1095 on process cooling chillers, normalized leaving water temperature at -8°C, in accordance with standard EN 14825 | **(6)** SCOP in accordance with standard EN 14825. Heating mode performance is defined for average climate conditions. | **(7)** Following ecodesign regulation EU 813/2013 on space heaters, normalized leaving water temperature at 7°C, in accordance with standard EN 14825, average climate conditions. | **(8)** Following energy labelling regulation EU 811/2013 on space heaters.

G(A) B(B) H(C) 040(D) S(E) P(F) 1(G) M(H)

(A) **G** = eComfort
(B) **A** = Standard Air source unit - **B** = Advanced Air source unit
(C) **C** = Cooling only unit - **H** = Heat pump unit
(D) **040** = Approximate power in kW
(E) **S** = Single circuit - **D** = Double circuit
(F) **P** = Refrigerant R32
(G) **1** = Revision number
(H) **M** = 400V/3/50Hz

Air source version - Advanced Inverter

Heat pumps units

eCOMFORT - GBH				040S	060S	070S	080S	110S	120S
Nominal thermal performances - Cooling mode									
Cooling capacity (1)			kW	39,5	57,7	64,0	76,4	93,4	109,2
Total absorbed power (1)			kW	13,6	20,8	22,5	26,8	33,5	37,6
EER (1)				2,9	2,8	2,8	2,9	2,8	2,9
Comfort Application	EC Fans	Seasonal Energy Efficiency Ratio (2) **SEER**		4.53	4.55	4.45	4.35	4.5	4.68
		Seasonal energy efficiency (3) **ηs,c**	%	178	179	175	171	177	184
Process Application		Seasonal Energy Performance Ratio (4) **SEPR** - High temperature (7°C)		6.23	5.95	5.78	5.65	5.62	5.51
		Seasonal Energy Performance Ratio (5) **SEPR** - Medium temperature (-8°C)		3.52	3.54	3.36	3.24	3.21	3.14
Nominal thermal performances - Heating mode									
Heating capacity (1)			kW	40,4	60,0	68,3	83,4	100,4	121,5
Total absorbed power (1)			kW	13,6	20,6	23,0	28,8	32,5	41,6
COP (1)				3,0	2,9	3,0	2,9	3,1	2,9
Comfort Application	EC Fans	Seasonal Coeficient of Performance (6) **SCOP**		3.93	3.93	4	3.95	4.05	4.05
		Seasonal energy efficiency (7) **ηs,h**	%	154	154	157	155	159	159
Acoustic data									
Global sound power level - Standard unit			dB(A)	82,5	83,3	82,9	85,6	85,6	87,8
Electrical data									
Maximum power			kW	16.4	25.3	28.8	37.5	42.6	55.2
Maximum current			A	26.2	41	47.3	61.4	70.7	89.8
Starting current			A	26.2	41	166.8	217.6	226.9	331.7
Short circuit current			kA	10,0	10,0	10,0	10,0	10,0	10,0
Refrigeration circuit									
Number of circuits				1	1	1	1	1	1
Number of compressors				1	1	2	2	2	2
Total refrigerant load - R32			kg	5,8	8,2	10,5	12,0	20,2	21,0
Evaporator									
Nominal water flow rate			m^3/h	6,8	10,0	11,0	13,2	16,1	18,8
Nominal pressure drop			kPa	29,4	27,5	33,4	32,4	29,1	25,9
Hydraulic connection									
Type				Threaded male					
Diameter				1 1/2"	2"	2"	2"	2 1/2"	2 1/2"

(1) EUROVENT certified data, in accordance with standard EN 14511.
Cooling mode: Evaporator water temperature = 12/7°C | Outdoor air temperature = 35°C / **Heating mode:** Condenser water temperature = 40/45°C | Outdoor air temperature = 7°C
(2) SEER in accordance with standard EN 14825. | **(3)** Following ecodesign regulation EU 2016/2281 on space cooling, normalized leaving water temperature at 7°C, in accordance with standard EN 14825. | **(4)** Following ecodesign regulation EU 2016/2281 on process cooling units, normalized leaving water temperature at 7°C, in accordance with standard EN 14825. | **(5)** Following ecodesign regulation EU 2015/1095 on process cooling chillers, normalized leaving water temperature at -8°C, in accordance with standard EN 14825. | **(6)** SCOP in accordance with standard EN 14825. Heating mode performance is defined for average climate conditions. | **(7)** Following ecodesign regulation EU 813/2013 on space heaters, normalized leaving water temperature at 7°C, in accordance with standard EN 14825, average climate conditions. | **(8)** Following energy labelling regulation EU 811/2013 on space heaters.

G(A) B(B) H(C) 040(D) S(E) P(F) 1(G) M(H)

(A) **G** = eComfort
(B) **A** = Standard Air source unit - **B** = Advanced Air source unit
(C) **C** = Cooling only unit - **H** = Heat pump unit
(D) **040** = Approximate power in kW
(E) **S** = Single circuit - **D** = Double circuit
(F) **P** = Refrigerant R32
(G) **1** = Revision number
(H) **M** = 400V/3/50Hz

Air source version - Advanced Inverter

Heat pumps units

eCOMFORT - GBH				125D	140D	160D	185D	210D
Nominal thermal performances - Cooling mode								
Cooling capacity (1)			kW	123,5	144,1	158,1	169,9	196,0
Total absorbed power (1)			kW	42,3	50,4	51,7	55,6	66,6
EER (1)				2,9	2,9	3,1	3,1	2,9
Comfort Application	EC Fans	Seasonal Energy Efficiency Ratio (2) **SEER**		4.85	4.8	4.98	4.9	4.95
		Seasonal energy efficiency (3) **ηs,c**	%	191	189	196	193	195
Process Application		Seasonal Energy Performance Ratio (4) **SEPR** - High temperature (7°C)		5.59	5.34	5.93	5.69	5.46
		Seasonal Energy Performance Ratio (5) **SEPR** - Medium temperature (-8°C)		3.66	3.67	3.78	3.76	3.69
Nominal thermal performances - Heating mode								
Heating capacity (1)			kW	126,8	146,9	161,1	171,3	199,9
Total absorbed power (1)			kW	40,4	48,2	49,9	53,6	65,3
COP (1)				3,1	3,1	3,2	3,2	3,1
Comfort Application	EC Fans	Seasonal Coeficient of Performance (6) **SCOP**		3.88	3.88	3.9	3.88	3.93
		Seasonal energy efficiency (7) **ηs,h**	%	152	152	153	152	154
Acoustic data								
Global sound power level - Standard unit			dB(A)	85,3	88,0	88,2	89,4	89,8
Electrical data								
Maximum power			kW	58	68.3	71.9	81.6	94.8
Maximum current			A	95.1	113.4	120.4	134.3	156.5
Starting current			A	211.9	269.6	276.7	338.5	398.3
Short circuit current			kA	10,0	10,0	10,0	10,0	10,0
Refrigeration circuit								
Number of circuits				2	2	2	2	2
Number of compressors				2+2	2+2	2+2	2+2	2+2
Total refrigerant load - R32			kg	20,0	22,0	27,0	27,2	27,6
Evaporator								
Nominal water flow rate			m^3/h	21,3	24,9	27,3	29,3	33,8
Nominal pressure drop			kPa	24,8	21,6	25,7	25,9	33,8
Hydraulic connection								
Type				Victaulic				
Diameter				2"1/2		3"		

(1) EUROVENT certified data, in accordance with standard EN 14511.
Cooling mode: Evaporator water temperature = 12/7°C | Outdoor air temperature = 35°C / **Heating mode:** Condenser water temperature = 40/45°C | Outdoor air temperature = 7°C
(2) SEER in accordance with standard EN 14825. | **(3)** Following ecodesign regulation EU 2016/2281 on space cooling, normalized leaving water temperature at 7°C, in accordance with standard EN 14825. | **(4)** Following ecodesign regulation EU 2016/2281 on process cooling units, normalized leaving water temperature at 7°C, in accordance with standard EN 14825. | **(5)** Following ecodesign regulation EU 2015/1095 on process cooling chillers, normalized leaving water temperature at -8°C, in accordance with standard EN 14825. | **(6)** SCOP in accordance with standard EN 14825. Heating mode performance is defined for average climate conditions. | **(7)** Following ecodesign regulation EU 813/2013 on space heaters, normalized leaving water temperature at 7°C, in accordance with standard EN 14825, average climate conditions. | **(8)** Following energy labelling regulation EU 811/2013 on space heaters.

G(A) A(B) C(C) 035(D) S(E) P(F) 1(G) M(H)

(A) **G** = eComfort
(B) **A** = Standard Air source unit - **B** = Advanced Air source unit
(C) **C** = Cooling only unit - **H** = Heat pump unit
(D) **035** = Approximate power in kW
(E) **S** = Single circuit - **D** = Double circuit
(F) **P** = Refrigerant R32
(G) **1** = Revision number
(H) **M** = 400V/3/50Hz

Air source version

Cooling only units

eCOMFORT - GAC				035S	040S	045S	050S	055S	060S
Nominal thermal performances - Cooling mode									
Cooling capacity (1)			kW	38,4	41,6	47,5	51,8	55,0	63,6
Total absorbed power (1)			kW	12,7	13,8	15,8	17,0	18,5	21,1
EER (1)				3,0	3,0	3,0	3,1	3,0	3,0
Comfort Application	**Standard Fans**	Seasonal Energy Efficiency Ratio (2) **SEER**		4.36	4.6	4.3	4.46	4.35	4.38
		Seasonal energy efficiency (3) **ηs,c**	%	171	181	169	175	171	172
Process Application		Seasonal Energy Performance Ratio (4) **SEPR** - High temperature (7°C)		6.15	6.63	5.61	5.68	5.59	5.53
		Seasonal Energy Performance Ratio (5) **SEPR** - Medium temperature (-8°C)		3.36	3.49	3.5	3.47	3.48	3.49
Nominal thermal performances - Heating mode									
Heating capacity (1)			kW	-	-	-	-	-	-
Total absorbed power (1)			kW	-	-	-	-	-	-
COP (1)				-	-	-	-	-	-
Comfort Application	**Standard Fans**	Seasonal Coeficient of Performance (6) **SCOP**		-	-	-	-	-	-
		Seasonal energy efficiency (7) **ηs,h**	%	-	-	-	-	-	-
Acoustic data									
Global sound power level - Standard unit			dB(A)	76,9	76,9	75,0	76,3	77,3	82,9
Electrical data									
Maximum power			kW	16.9	18.9	20.7	22.4	24.1	28.8
Maximum current			A	28.8	31.1	35.4	38.2	41	47.5
Starting current			A	98.8	108.5	146.7	157.7	160.4	164.4
Short circuit current			kA	10,0	10,0	10,0	10,0	10,0	10,0
Refrigeration circuit									
Number of circuits				1	1	1	1	1	1
Number of compressors				2	2	2	2	2	2
Total refrigerant load - R32			kg	3,0	3,4	3,8	4,4	4,3	5,0
Evaporator									
Nominal water flow rate			m^3/h	6,6	7,2	8,2	8,9	9,5	11,0
Nominal pressure drop			kPa	38,7	32,4	41,7	36,1	40,5	43,3
Hydraulic connection									
Type				Threaded male					
Diameter				1"1/2	1"1/2	1"1/2	1"1/2	1"1/2	1"1/2

(1) EUROVENT certified data, in accordance with standard EN 14511.
Cooling mode: Evaporator water temperature = 12/7°C | Outdoor air temperature = 35°C / **Heating mode:** Condenser water temperature = 40/45°C | Outdoor air temperature = 7°C
(2) SEER in accordance with standard EN 14825. | **(3)** Following ecodesign regulation EU 2016/2281 on space cooling, normalized leaving water temperature at 7°C, in accordance with standard EN 14825. | **(4)** Following ecodesign regulation EU 2016/2281 on process cooling units, normalized leaving water temperature at 7°C, in accordance with standard EN 14825. | **(5)** Following ecodesign regulation EU 2015/1095 on process cooling chillers, normalized leaving water temperature at -8°C, in accordance with standard EN 14825 | **(6)** SCOP in accordance with standard EN 14825. Heating mode performance is defined for average climate conditions. | **(7)** Following ecodesign regulation EU 813/2013 on space heaters, normalized leaving water temperature at 7°C, in accordance with standard EN 14825, average climate conditions. | **(8)** Following energy labelling regulation EU 811/2013 on space heaters.

G(A) A(B) C(C) 035(D) S(E) P(F) 1(G) M(H)

(A) **G** = eComfort
(B) **A** = Standard Air source unit - **B** = Advanced Air source unit
(C) **C** = Cooling only unit - **H** = Heat pump unit
(D) **035** = Approximate power in kW
(E) **S** = Single circuit - **D** = Double circuit
(F) **P** = Refrigerant R32
(G) **1** = Revision number
(H) **M** = 400V/3/50Hz

Air source version

Cooling only units

eCOMFORT - GAC				065S	070S	080S	095S	110S	115S	125S
Nominal thermal performances - Cooling mode										
Cooling capacity (1)			kW	64,3	70,0	86,3	95,8	108,3	119,3	128,6
Total absorbed power (1)			kW	20,4	22,6	26,9	29,9	34,8	37,9	41,1
EER (1)				3,1	3,1	3,2	3,2	3,1	3,2	3,1
Comfort Application	Standard Fans	Seasonal Energy Efficiency Ratio (2) **SEER**		4.6	4.58	4.61	4.67	4.73	4.6	4.73
		Seasonal energy efficiency (3) **ηs,c**	%	181	180	181	184	186	181	186
Process Application		Seasonal Energy Performance Ratio (4) **SEPR** - High temperature (7°C)		5.79	5.72	5.9	5.86	5.8	5.77	5.77
		Seasonal Energy Performance Ratio (5) **SEPR** - Medium temperature (-8°C)		3.53	3.52	3.68	3.6	3.63	3.66	3.7
Nominal thermal performances - Heating mode										
Heating capacity (1)			kW	-	-	-	-	-	-	-
Total absorbed power (1)			kW	-	-	-	-	-	-	-
COP (1)				-	-	-	-	-	-	-
Comfort Application	Standard Fans	Seasonal Coeficient of Performance (6) **SCOP**		-	-	-	-	-	-	-
		Seasonal energy efficiency (7) **ηs,h**	%	-	-	-	-	-	-	-
Acoustic data										
Global sound power level - Standard unit			dB(A)	82,5	84,2	86,7	88,4	87,3	90,2	88,7
Electrical data										
Maximum power			kW	28.4	31	37.1	41.6	47.2	54.3	57.4
Maximum current			A	47.2	52.8	63.1	69.4	78.7	88.5	96.9
Starting current			A	164	209	219.3	273.5	320.5	330.4	253.1
Short circuit current			kA	10,0	10,0	10,0	10,0	10,0	10,0	10,0
Refrigeration circuit										
Number of circuits				1	1	1	1	1	1	1
Number of compressors				2	2	2	2	2	2	3
Total refrigerant load - R32			kg	5,8	5,8	7,4	7,5	8,0	8,6	9,2
Evaporator										
Nominal water flow rate			m^3/h	11,1	12,1	14,9	16,5	18,7	20,6	22,2
Nominal pressure drop			kPa	33,7	39,6	40,5	49,1	38,1	45,6	35,0
Hydraulic connection										
Type				Victaulic or Welded						
Diameter				2"	2"	2"	2"1/2	2"1/2	2"1/2	2"1/2

(1) EUROVENT certified data, in accordance with standard EN 14511.
Cooling mode: Evaporator water temperature = 12/7°C | Outdoor air temperature = 35°C / **Heating mode:** Condenser water temperature = 40/45°C | Outdoor air temperature = 7°C
(2) SEER in accordance with standard EN 14825. | **(3)** Following ecodesign regulation EU 2016/2281 on space cooling, normalized leaving water temperature at 7°C, in accordance with standard EN 14825. | **(4)** Following ecodesign regulation EU 2016/2281 on process cooling units, normalized leaving water temperature at 7°C, in accordance with standard EN 14825. | **(5)** Following ecodesign regulation EU 2015/1095 on process cooling chillers, normalized leaving water temperature at -8°C, in accordance with standard EN 14825. | **(6)** SCOP in accordance with standard EN 14825. Heating mode performance is defined for average climate conditions. | **(7)** Following ecodesign regulation EU 813/2013 on space heaters, normalized leaving water temperature at 7°C, in accordance with standard EN 14825, average climate conditions. | **(8)** Following energy labelling regulation EU 811/2013 on space heaters.

G(A) A(B) C(C) 035(D) S(E) P(F) 1(G) M(H)

(A) **G** = eComfort
(B) **A** = Standard Air source unit - **B** = Advanced Air source unit
(C) **C** = Cooling only unit - **H** = Heat pump unit
(D) **035** = Approximate power in kW
(E) **S** = Single circuit - **D** = Double circuit
(F) **P** = Refrigerant R32
(G) **1** = Revision number
(H) **M** = 400V/3/50Hz

Air source version

Cooling only units

eCOMFORT - GAC				140S	110D	125D	140D	160D	185D	210D
Nominal thermal performances - Cooling mode										
Cooling capacity (1)			kW	154,8	111,4	127,5	142,3	167,8	187,2	210,5
Total absorbed power (1)			kW	51,1	36,9	41,9	46,6	53,6	60,7	69,9
EER (1)				3,0	3,0	3,0	3,1	3,1	3,1	3,0
Comfort Application	Standard Fans	Seasonal Energy Efficiency Ratio (2) **SEER**		4.53	4.66	4.6	4.65	4.72	4.71	4.64
		Seasonal energy efficiency (3) **ηs,c**	%	178	183	181	183	186	185	183
Process Application		Seasonal Energy Performance Ratio (4) **SEPR** - High temperature (7°C)		5.52	5.7	5.54	5.51	5.8	5.64	5.45
		Seasonal Energy Performance Ratio (5) **SEPR** - Medium temperature (-8°C)		3.69	3.79	3.74	3.79	3.82	3.77	3.72
Nominal thermal performances - Heating mode										
Heating capacity (1)			kW	-	-	-	-	-	-	-
Total absorbed power (1)			kW	-	-	-	-	-	-	-
COP (1)				-	-	-	-	-	-	-
Comfort Application	Standard Fans	Seasonal Coeficient of Performance (6) **SCOP**		-	-	-	-	-	-	-
		Seasonal energy efficiency (7) **ηs,h**	%	-	-	-	-	-	-	-
Seasonal efficiency class (8)				-	-	-	-	-	-	-
Acoustic data										
Global sound power level - Standard unit			dB(A)	91,7	80,3	85,9	88,4	89,7	91,7	92,1
Electrical data										
Maximum power			kW	72.4	48.1	57.6	64.5	74.1	88.3	99.5
Maximum current			A	117.5	81.8	95	108.6	126	145.8	164.5
Starting current			A	321.7	201.3	211.8	264.8	282.2	350	406.3
Short circuit current			kA	10,0	10,0	10,0	10,0	10,0	10,0	10,0
Refrigeration circuit										
Number of circuits				1	2	2	2	2	2	2
Number of compressors				3	2+2	2+2	2+2	2+2	2+2	2+2
Total refrigerant load - R32			kg	9,4	10,8	11,4	12,8	14,4	15,0	15,2
Evaporator										
Nominal water flow rate			m^3/h	26,7	19,2	22,0	24,6	28,9	32,3	36,3
Nominal pressure drop			kPa	49,3	20,5	26,2	21,1	28,6	31,0	38,6
Hydraulic connection										
Type				Victaulic or Welded						
Diameter				2"1/2	2"1/2	2"1/2	2"1/2	3"	3"	3"

(1) EUROVENT certified data, in accordance with standard EN 14511.
Cooling mode: Evaporator water temperature = 12/7°C | Outdoor air temperature = 35°C / **Heating mode:** Condenser water temperature = 40/45°C | Outdoor air temperature = 7°C
(2) SEER in accordance with standard EN 14825. | **(3)** Following ecodesign regulation EU 2016/2281 on space cooling, normalized leaving water temperature at 7°C, in accordance with standard EN 14825. | **(4)** Following ecodesign regulation EU 2016/2281 on process cooling units, normalized leaving water temperature at 7°C, in accordance with standard EN 14825. | **(5)** Following ecodesign regulation EU 2015/1095 on process cooling chillers, normalized leaving water temperature at -8°C, in accordance with standard EN 14825. | **(6)** SCOP in accordance with standard EN 14825. Heating mode performance is defined for average climate conditions. | **(7)** Following ecodesign regulation EU 813/2013 on space heaters, normalized leaving water temperature at 7°C, in accordance with standard EN 14825, average climate conditions. | **(8)** Following energy labelling regulation EU 811/2013 on space heaters.

G(A) B(B) C(C) 040(D) S(E) P(F) 1(G) M(H)

(A) **G** = eComfort
(B) **A** = Air source unit fix compressor - **B** = Advanced Air source unit
(C) **C** = Cooling only unit - **H** = Heat pump unit
(D) **040** = Approximate power in kW
(E) **S** = Single circuit - **D** = Double circuit
(F) **P** = Refrigerant R32
(G) **1** = Revision number
(H) **M** = 400V/3/50Hz

Air source version - Advanced Inverter — Cooling only units

eCOMFORT - GBC			040S	060S	070S	080S	110S	120S	125D	140D
Nominal thermal performances - Cooling mode										
Cooling capacity (1)		kW	43,8	65,0	71,3	87,7	108,3	132,1	124,8	146,7
Total absorbed power (1)		kW	15,1	22,8	24,4	28,6	36,4	44,4	40,9	48,6
EER (1)			2,90	2,85	2,92	3,06	2,98	2,97	3,05	3,02
Comfort Application	EC Fans	Seasonal Energy Efficiency Ratio (2) **SEER**	4,75	4,88	4,73	4,80	4,98	4,88	5,0	5,0
		Seasonal energy efficiency (3) **ηs,c** %	187	192	186	189	196	192	195,4	197,5
Process Application		Seasonal Energy Performance Ratio (4) **SEPR** - High temperature (7°C)	6,32	6,01	6	6,16	6,29	5,97	5,5	5,7
		Seasonal Energy Performance Ratio (5) SEPR - Medium temperature (-8°C)	3,41	3,53	3,42	3,53	3,60	3,56	3.68	3.74
Nominal thermal performances - Heating mode										
Heating capacity (1)		kW	-	-	-	-	-	-	-	-
Total absorbed power (1)		kW	-	-	-	-	-	-	-	-
COP (1)			-	-	-	-	-	-	-	-
Comfort Application	EC Fans	Seasonal Coeficient of Performance (6) **SCOP**	-	-	-	-	-	-	-	-
		Seasonal energy efficiency (7) **ηs,h** %	-	-	-	-	-	-	-	-
Acoustic data										
Global sound power level - Standard unit		dB(A)	84,2	85,0	84,6	87,2	87,1	89,5	84,4	86,1
Electrical data										
Maximum power		kW	16.4	25.3	28.8	37.5	42.6	55.2	58	68.3
Maximum current		A	26.2	41	47.3	61.4	70.7	89.8	95.1	113.4
Starting current		A	26.2	41	166.8	217.6	226.9	331.7	211.9	269.6
Short circuit current		kA	10							
Refrigeration circuit										
Number of circuits			1	1	1	1	1	1	2	2
Number of compressors			1	1	2	2	2	2	2+2	2+2
Total refrigerant load - R32		kg	3,6	4,6	6,0	7,4	8,8	9,0	9,2	9,4
Evaporator										
Nominal water flow rate		m^3/h	7,6	11,2	12,3	15,1	18,7	22,8	21,53	25,31
Nominal pressure drop		kPa	35,8	45,1	41,1	41,7	38,1	36,7	25	22
Hydraulic connection										
Type			Threaded male				Victaulic or Welded			
Diameter			1"1/2	2			2"1/2			

(1) EUROVENT certified data, in accordance with standard EN 14511.
Cooling mode: Evaporator water temperature = 12/7°C | Outdoor air temperature = 35°C / **Heating mode:** Condenser water temperature = 40/45°C | Outdoor air temperature = 7°C
(2) SEER in accordance with standard EN 14825. | **(3)** Following ecodesign regulation EU 2016/2281 on space cooling, normalized leaving water temperature at 7°C, in accordance with standard EN 14825. | **(4)** Following ecodesign regulation EU 2016/2281 on process cooling units, normalized leaving water temperature at 7°C, in accordance with standard EN 14825. | **(5)** Following ecodesign regulation EU 2015/1095 on process cooling chillers, normalized leaving water temperature at -8°C, in accordance with standard EN 14825. | **(6)** SCOP in accordance with standard EN 14825. Heating mode performance is defined for average climate conditions. | **(7)** Following ecodesign regulation EU 813/2013 on space heaters, normalized leaving water temperature at 7°C, in accordance with standard EN 14825, average climate conditions. | **(8)** Following energy labelling regulation EU 811/2013 on space heaters.

G(A) B(B) C(C) 040(D) S(E) P(F) 1(G) M(H)

(A) **G** = eComfort
(B) **A** = Air source unit fix compressor - **B** = Advanced Air source unit
(C) **C** = Cooling only unit - **H** = Heat pump unit
(D) **040** = Approximate power in kW
(E) **S** = Single circuit - **D** = Double circuit
(F) **P** = Refrigerant R32
(G) **1** = Revision number
(H) **M** = 400V/3/50Hz

Air source version - Advanced Inverter

Cooling only units

eCOMFORT - GBC				160D	185D	210D
Nominal thermal performances - Cooling mode						
Cooling capacity (1)			kW	159,5	170,0	196,6
Total absorbed power (1)			kW	50,6	54,1	64,2
EER (1)				3,15	3,14	3,06
Comfort Application	EC Fans	Seasonal Energy Efficiency Ratio (2) **SEER**		5.05	5.03	5.08
Comfort Application	EC Fans	Seasonal energy efficiency (3) **ηs,c**	%	199	198	200
Process Application	EC Fans	Seasonal Energy Performance Ratio (4) **SEPR** - High temperature (7°C)		6.01	5.95	5.64
Process Application	EC Fans	Seasonal Energy Performance Ratio (5) SEPR - Medium temperature (-8°C)		3.77	3.75	3.7
Nominal thermal performances - Heating mode						
Heating capacity (1)			kW	-	-	-
Total absorbed power (1)			kW	-	-	-
COP (1)				-	-	-
Comfort Application	EC Fans	Seasonal Coeficient of Performance (6) **SCOP**		-	-	-
Comfort Application	EC Fans	Seasonal energy efficiency (7) **ηs,h**	%	-	-	-
Acoustic data						
Global sound power level - Standard unit			dB(A)	85,2	87,3	87,5
Electrical data						
Maximum power			kW	71.7	81.6	94.8
Maximum current			A	120	135.1	157.1
Starting current			A	276.3	338.5	398.3
Short circuit current			kA		10	
Refrigeration circuit						
Number of circuits				2	2	2
Number of compressors				2+2	2+2	2+2
Total refrigerant load - R32			kg	14,6	15	15,2
Evaporator						
Nominal water flow rate			m^3/h	27,52	29,32	33,91
Nominal pressure drop			kPa	26	26	34
Hydraulic connection						
Type					Victaulic or Welded	
Diameter					3"	

(1) EUROVENT certified data, in accordance with standard EN 14511.
Cooling mode: Evaporator water temperature = 12/7°C | Outdoor air temperature = 35°C / **Heating mode:** Condenser water temperature = 40/45°C | Outdoor air temperature = 7°C
(2) SEER in accordance with standard EN 14825. | **(3)** Following ecodesign regulation EU 2016/2281 on space cooling, normalized leaving water temperature at 7°C, in accordance with standard EN 14825. | **(4)** Following ecodesign regulation EU 2016/2281 on process cooling units, normalized leaving water temperature at 7°C, in accordance with standard EN 14825. | **(5)** Following ecodesign regulation EU 2015/1095 on process cooling chillers, normalized leaving water temperature at -8°C, in accordance with standard EN 14825. | **(6)** SCOP in accordance with standard EN 14825. Heating mode performance is defined for average climate conditions. | **(7)** Following ecodesign regulation EU 813/2013 on space heaters, normalized leaving water temperature at 7°C, in accordance with standard EN 14825, average climate conditions. | **(8)** Following energy labelling regulation EU 811/2013 on space heaters.

Air source version

Heat pumps units

eCOMFORT - GAH		035S	040S	045S	050S	055S	060S	065S	070S	080S
A	mm	1125			1125			2250		
B		1320			1320			1320		
C		1740			2109			1779		
Weight of standard units										
Basic unit	kg	350	369	385	416	424	448	614	608	649

Air source version

Heat pumps units

eCOMFORT - GAH		095S	110S	115S	125S	140S	110D	125D	140D	160D	185D	210D
A	mm	2250			2250					2250		
B		1320			1740					2650		
C		2071			2071					2071		
Weight of standard units												
Basic unit	kg	742	771	793	918	1006	975	1017	998	1388	1463	1463

Air source version - Advanced

Heat pumps units

eCOMFORT - GBH		040S	060S	070S	080S	110S	120S
A	mm	1125	1125	2250	2250	2250	2250
B		1320	1320	1320	1320	1320	1320
C		1740	2109	1770	1779	2071	2071
Weight of standard units							
Basic unit	kg	351	401	609	705	746	789

Air source version - Advanced

Heat pumps units

eCOMFORT - GBH		125S	140S	160S	185S	210S
A	mm	2250	2250	2250	2250	2250
B		1740	1740	2650	2650	2650
C		2071	2071	2071	2071	2071
Weight of standard units						
Basic unit	kg	1001	1065	1360	1427	1427

Air source version

Cooling only units

eCOMFORT - GAC		035S	040S	045S	050S	055S	060S	065S	070S	080S
A	mm	1125			1125			2250		
B		1320			1320			1320		
C		1740			2109			1779		
Weight of standard units										
Basic unit	kg	325	339	350	379	385	405	565	559	605

Air source version

Cooling only units

eCOMFORT - GAC		095S	110S	115S	125S	140S	110D	125D	140D	160D	185D	210D
A	mm	2250			2250					2250		
B		1320			1740					2650		
C		2071			2071					2071		
Weight of standard units												
Basic unit	kg	679	701	730	846	932	893	932	911	1216	1340	1340

Air source version - Advanced

Cooling only units

eCOMFORT - GBC		040S	060S	070S	080S	110S	120S
A	mm	1125		2250	2250		
B		1320		1320	1320		1320
C		1740	2109	1779	1779	2071	2071
Weight of standard units							
Basic unit	kg	332	367	547	640	682	721

Air source version - Advanced

Cooling only units

eCOMFORT - GBC		125D	140D	160D	185D	210D
A	mm	2250		2250		
B		1740		2650		
C		2071		2071		
Weight of standard units						
Basic unit	kg	894	949	1201	1283	1283

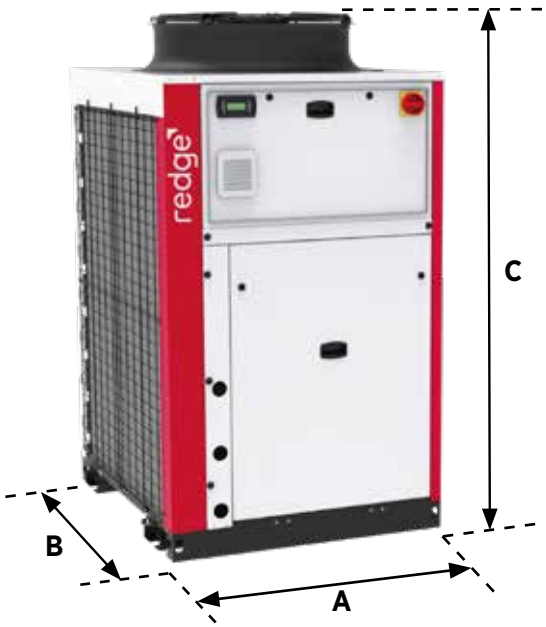

redge

NEXT LEVEL HVAC SOLUTIONS

redge

New !

eComfort Therma

Greater perfomance
with our latest heating-optimized heat pump

For commercial applications

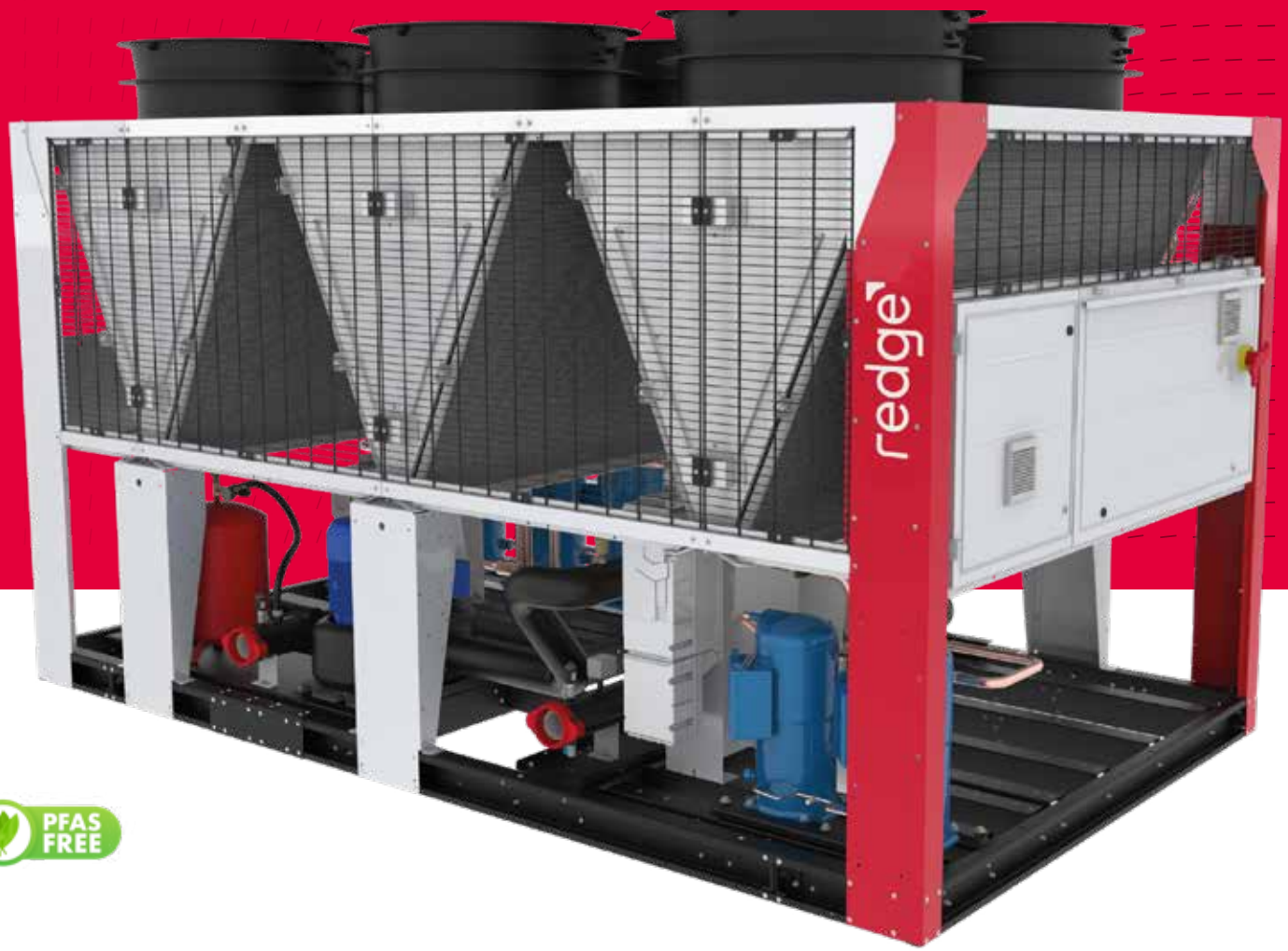

PFAS FREE

AIR SOURCE R32

220 - 500 kW

Redge participates in the ECP programme for LCP-HP.
Check ongoing validity of certificate : www.eurovent-certification.com

EUROVENT CERTIFIED PERFORMANCE
www.eurovent-certification.com

- **Fast and easy installation and commissioning** thanks to the integration of a complete hydraulic module with buffer tanks.
- **Heating Optimized** for greater comfort, even in the coldest seasons
- **Outstanding seasonal SCOP efficiencies,** exceeding the European EcoDesign 2017 requirements for heating applications
- **Precise water temperature control** in heating and cooling mode thanks to highly efficient components.

CONTROL

- eClimatic electronic controller and intelligent control parameters optimising part-load efficiency.
- Integrated communication solutions offering flexibility (master/slave, Modbus, BACnet).
- DC Advanced display, equipped with a graphic screen providing access to the main user parameters, with two optional displays:
  - Remote Display
  - Service Display

eCLIMATIC



DC Advanced



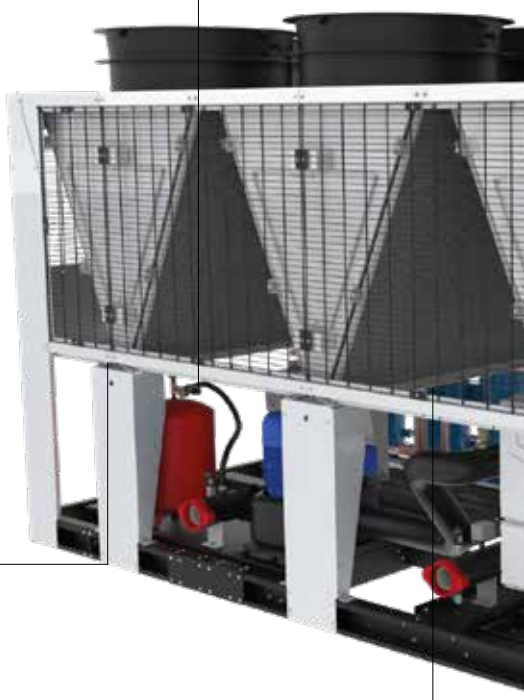

eDRIVE

Variable speed drive pump option, which modulates the water flow through the plate heat exchanger and reduces energy costs:

- Saves energy consumption especially at part-load conditions and during off period, reaching up to 75% reduction of the pump consumption.
- Savings on the initial system cost, due to fewer pumps and piping connections than primary-secondary systems.
- Flexibility and accuracy of the pump operation control: smooth start and stop, gradual change of speed, accuracy and stability of control.
- Reduction of the repeated stress on the pump and piping resulting in longer equipment lifetime.
- Elimination of the start-up current thanks to variable frequency drive that controls a gradual pump motor supply.





REMOTE MONITORING

- Connectivity through **RedgeCloud** (REDGE WEB PORTAL for Multi sites / units).
- BMS through: **e-savvy**





ACOUSTIC COMFORT

Three different noise level configurations available:

Quiet operation (standard), achieved with compact design, silent compressors and pumps, and with high-performance propeller fans, all installed in a closed box.
Low noise level option: High performance acoustic compressor casing can halve the noise produced by the unit.
Active Acoustic Attenuation System with variable fan speed allows progressive adaptation of the unit to the building load while respecting the noise level constraints and the operating limits (as an option).



THERMODYNAMIC SYSTEM

Multi-scroll compressors, mounted in tandem or trio, to provide the best seasonal efficiencies.
Large surface exchangers built with copper tubing and aluminium fins.
High performance propeller fans with profiled blades to improve efficiency and reduce noise level.
Thermally insulated and frost-protected water heat exchangers made from stainless steel plates with copper brazing.
One or two independent circuits, each equipped with electronic expansion valves.
Desuperheater (as an option) : additional plate heat exchanger on each circuit to recover the rejected heat and provide free hot water for sanitary or industrial purposes.



CASING & DESIGN

Casing made of white painted galvanised steel.
Compact design, granted by the V-shaped coils.
All thermodynamic and hydraulic components installed below the coils.

Photos and illustrations are not contractual.

$G_{(A)}$ $H_{(B)}$ $S_{(C)}$ $220_{(D)}$ $D_{(E)}$ $P_{(F)}$ $1_{(G)}$ $M_{(H)}$

(A) **G** = eComfort
(B) **H** = Heating optimized
(C) **S** = Standard compressor
(D) **220** = Approximate power in kW
(E) **D** = Dual circuit
(F) **P** = Refrigerant R32
(G) **1** = Revision number
(H) **M** = 400V/3/50Hz

Air source version

Heat pumps units

eCOMFORT THERMA - GHS				220D	250D	280D	320D	360D
Nominal thermal performances - Heating mode								
Heating capacity (1)			kW	217,0	251,8	272,9	313,8	354,3
Total absorbed power (1)			kW	69,7	82,8	90,0	99,3	118,1
COP (1)				3,11	3,04	3,03	3,16	3,00
Comfort Application	**Standard Fans**	Seasonal Coeficient of Performance (6) **SCOP**		3.875	3.85	3.8	3.9	3.875
		Seasonal energy efficiency (7) **ηs,h**	%	152	151	149	153	152
Nominal thermal performances - Cooling mode								
Cooling capacity (1)			kW	201,0	237,7	255,7	287,7	328,0
Total absorbed power (1)			kW	74,2	86,9	97,1	105,0	119,9
EER (1)				2,71	2,74	2,63	2,74	2,74
Comfort Application	**Standard Fans**	Seasonal Energy Efficiency Ratio (2) **SEER**		4.625	4.3	4.225	4.475	4.4
		Seasonal energy efficiency (3) **ηs,c**	%	182	169	166	176	173
Process Application	**Standard Fans**	Seasonal Energy Performance Ratio (4) **SEPR** - High temperature (7°C)		6.12	6.07	5.84	6.36	6.05
		Seasonal Energy Performance Ratio (5) **SEPR** - Medium temperature (-8°C)		3.76	3.78	3.72	3.82	3.76
Acoustic data								
Global sound power level - Standard unit			dB(A)	91,1	93,0	93,0	92,4	94,5
Sound power level - Standard unit + LNCJ option + QUIET setting			dB(A)	90,6	92,3	92,3	92,1	94,6
Heating capacity HM2 40/45°C LNCJ option + QUIET setting			kW	204,0	238,0	257,0	295,0	334,0
Electrical data								
Maximum power			kW	95.6	111.9	122.3	134.6	158.1
Maximum current			A	158.9	181.4	198.9	218.4	257.2
Starting current			A	323.6	332	380.8	369	439.1
Short circuit current			kA	50,0	50,0	50,0	50,0	50,0
Refrigeration circuit								
Number of circuits				2	2	2	2	2
Number of compressors				scroll/2+2	scroll/2+2	scroll/2+2	scroll/2+3	scroll/2+3
Total refrigerant load - R32			kg	41,0	42,0	44,0	57,0	58,0
Evaporator								
Nominal water flow rate			m^3/h	37,4	43,4	47,1	54,1	61,1
Nominal pressure drop			kPa	30,8	29,5	34,4	45,0	52,5
Hydraulic connection								
Type				Victaulic				
Diameter				4"				

(1) EUROVENT certified data, in accordance with standard EN 14511.
Cooling mode: Evaporator water temperature = 12/7°C | Outdoor air temperature = 35°C / **Heating mode:** Condenser water temperature = 40/45°C | Outdoor air temperature = 7°C
(2) SEER in accordance with standard EN 14825. | **(3)** Following ecodesign regulation EU 2016/2281 on space cooling, normalized leaving water temperature at 7°C, in accordance with standard EN 14825. | **(4)** Following ecodesign regulation EU 2016/2281 on process cooling units, normalized leaving water temperature at 7°C, in accordance with standard EN 14825. | **(5)** Following ecodesign regulation EU 2015/1095 on process cooling chillers, normalized leaving water temperature at -8°C, in accordance with standard EN 14825. |
(6) SCOP in accordance with standard EN 14825. Heating mode performance is defined for average climate conditions. | **(7)** Following ecodesign regulation EU 813/2013 on space heaters, normalized leaving water temperature at 7°C, in accordance with standard EN 14825, average climate conditions. | **(8)** Following energy labelling regulation EU 811/2013 on space heaters.

G(A) H(B) S(C) 220(D) D(E) P(F) 1(G) M(H)

(A) **G** = eComfort
(B) **H** = Heating optimized
(C) **S** = Standard compressor
(D) **220** = Approximate power in kW
(E) **D** = Dual circuit
(F) **P** = Refrigerant R32
(G) **1** = Revision number
(H) **M** = 400V/3/50Hz

Air source version

Heat pumps units

eCOMFORT THERMA - GHS				370D	380D	410D	450D	500D
Nominal thermal performances - Heating mode								
Heating capacity (1)			kW	364,9	380,6	412,5	451,7	484,0
Total absorbed power (1)			kW	121,7	125,6	130,9	149,9	158,3
COP (1)				3,00	3,03	3,15	3,01	3,06
Comfort Application	**Standard Fans**	Seasonal Coeficient of Performance (6) **SCOP**		3.85	3.85	4.025	3.8	3.875
		Seasonal energy efficiency (7) **ηs,h**	%	151	151	158	149	152
Nominal thermal performances - Cooling mode								
Cooling capacity (1)			kW	336,9	352,3	385,0	423,0	455,3
Total absorbed power (1)			kW	125,0	130,9	138,1	152,7	164,4
EER (1)				2,69	2,69	2,79	2,77	2,77
Comfort Application	**Standard Fans**	Seasonal Energy Efficiency Ratio (2) **SEER**		4.375	4.275	4.975	4.75	4.35
		Seasonal energy efficiency (3) **ηs,c**	%	172	168	196	187	171
Process Application	**Standard Fans**	Seasonal Energy Performance Ratio (4) **SEPR** - High temperature (7°C)		5.99	5.82	6.28	6	5.94
		Seasonal Energy Performance Ratio (5) **SEPR** - Medium temperature (-8°C)		3.74	3.68	3.79	3.72	3.68
Acoustic data								
Global sound power level - Standard unit			dB(A)	94,5	95,8	94,1	95,6	97,4
Sound power level - Standard unit + LNCJ option + QUIET setting			dB(A)	86,9	88,1	86,4	87,9	89,8
Heating capacity HM2 40/45°C LNCJ option + QUIET setting			kW	344,0	359,0	388,0	426,0	457,0
Electrical data								
Maximum power			kW	163.3	168.4	180.9	204.4	214.4
Maximum current			A	265.9	277	294.1	333	355.1
Starting current			A	447.8	586.8	476	514.8	664.9
Short circuit current			kA	50,0	50,0	50,0	50,0	50,0
Refrigeration circuit								
Number of circuits				2	2	2	2	2
Number of compressors				scroll/2+3	scroll/2+2	scroll/3+3	scroll/3+3	scroll/2+2
Total refrigerant load - R32			kg	59,0	60,0	79,0	80,0	82,0
Evaporator								
Nominal water flow rate			m^3/h	62,9	65,6	71,2	77,9	83,5
Nominal pressure drop			kPa	55,6	58,2	34,0	40,5	38,8
Hydraulic connection								
Type				Victaulic				
Diameter				4"		5"		

(1) EUROVENT certified data, in accordance with standard EN 14511.
Cooling mode: Evaporator water temperature = 12/7°C | Outdoor air temperature = 35°C / **Heating mode:** Condenser water temperature = 40/45°C | Outdoor air temperature = 7°C
(2) SEER in accordance with standard EN 14825. | **(3)** Following ecodesign regulation EU 2016/2281 on space cooling, normalized leaving water temperature at 7°C, in accordance with standard EN 14825. | **(4)** Following ecodesign regulation EU 2016/2281 on process cooling units, normalized leaving water temperature at 7°C, in accordance with standard EN 14825. | **(5)** Following ecodesign regulation EU 2015/1095 on process cooling chillers, normalized leaving water temperature at -8°C, in accordance with standard EN 14825. | **(6)** SCOP in accordance with standard EN 14825. Heating mode performance is defined for average climate conditions. | **(7)** Following ecodesign regulation EU 813/2013 on space heaters, normalized leaving water temperature at 7°C, in accordance with standard EN 14825, average climate conditions. | **(8)** Following energy labelling regulation EU 811/2013 on space heaters.

$G_{(A)}$ $H_{(B)}$ $S_{(C)}$ $220_{(D)}$ $D_{(E)}$ $P_{(F)}$ $1_{(G)}$ $M_{(H)}$

(A) **G** = eComfort
(B) **H** = Heating optimized
(C) **S** = Standard compressor
(D) **220** = Approximate power in kW
(E) **D** = Dual circuit
(F) **P** = Refrigerant R32
(G) **1** = Revision number
(H) **M** = 400V/3/50Hz

Air source version

Heat pumps units

eCOMFORT - GHS		220D	250D	280D	320D	360D	370D	380D	410D	450D	500D
A	mm	2765			4044				5316		
B		2264			2264				2264		
C		2402			2402				2402		
Weight of standard units											
Basic unit	kg	1950	2080	2090	2720	2746	2765	2796	3412	3498	3529

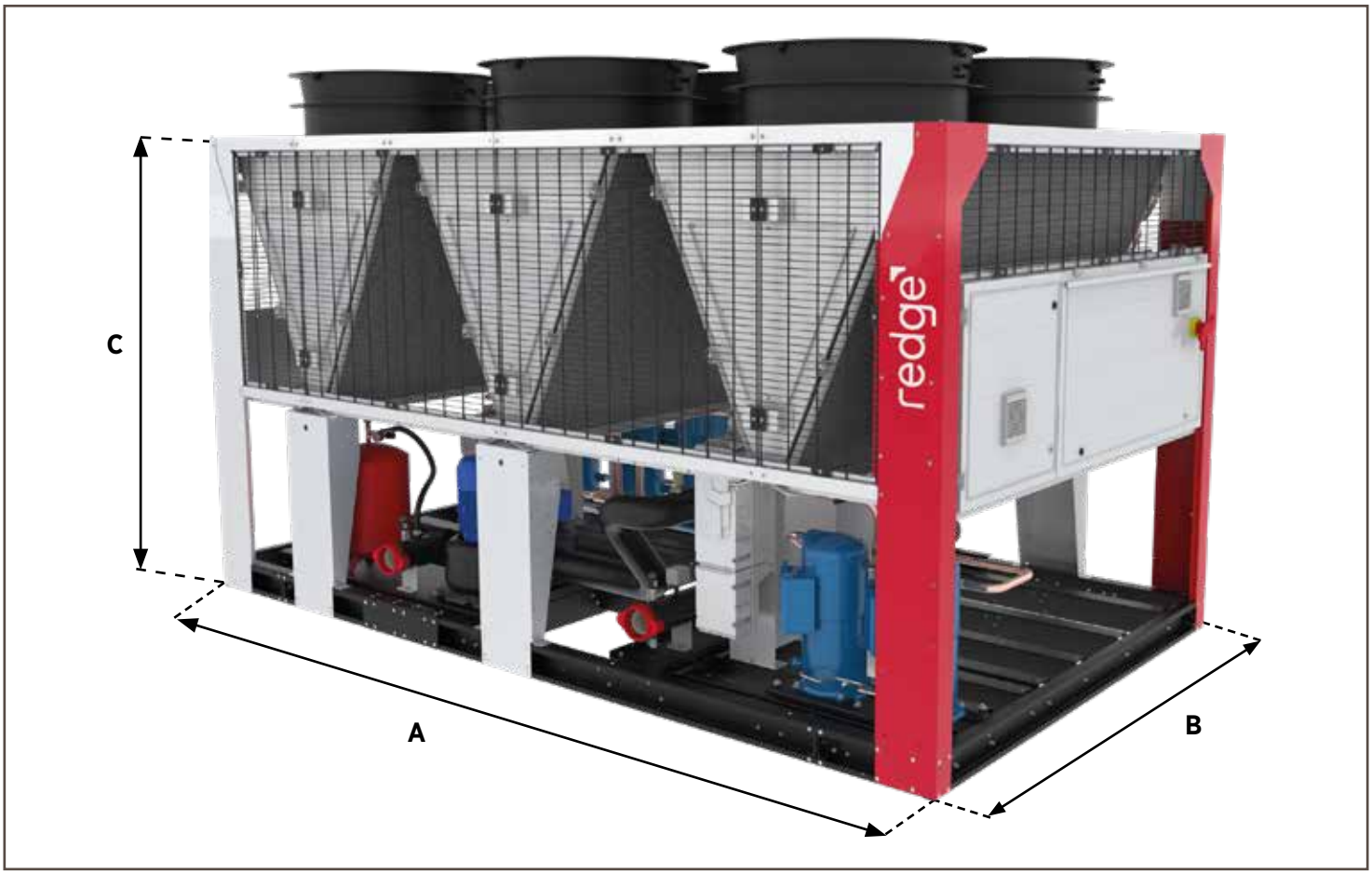

redge

eComfort MC

Air source chillers



AIR SOURCE R32

220 - 700 kW

Redge participates in the ECP programme for LCP-HP.
Check ongoing validity of certificate : www.eurovent-certification.com

EUROVENT CERTIFIED PERFORMANCE
www.eurovent-certification.com

Fast and easy installation and commissioning thanks to the integration of a complete hydraulic module with buffer tanks.

Total system modulation granted by EC motor fans and inverter technology on compressors and pumps.

Excellent seasonal energy efficiencies (SEER and SEPR) that exceed the European EcoDesign 2021 requirements.

Precise water temperature control in heating and cooling mode thanks to highly efficient components.

CONTROL

eClimatic electronic controller and intelligent control parameters optimising part-load efficiency.
Integrated communication solutions offering flexibility (master/slave, Modbus, BACnet).
DC Advanced display, equipped with a graphic screen providing access to the main user parameters, with two optional displays:
- Remote Display
- Service Display

eCLIMATIC



DC Advanced







eDRIVE

Variable speed drive pump option, which modulates the water flow through the plate heat exchanger and reduces energy costs:

Saves energy consumption especially at part-load conditions and during off period, reaching up to 75% reduction of the pump consumption.
Savings on the initial system cost, due to fewer pumps and piping connections than primary-secondary systems.
Flexibility and accuracy of the pump operation control: smooth start and stop, gradual change of speed, accuracy and stability of control.
Reduction of the repeated stress on the pump and piping resulting in longer equipment lifetime.
Elimination of the start-up current thanks to variable frequency drive that controls a gradual pump motor supply.





REMOTE MONITORING

Connectivity through **RedgeCloud** (REDGE WEB PORTAL for Multi sites / units).
BMS through: **e-savvy**





ACOUSTIC COMFORT

Three different noise level configurations available:
Quiet operation (standard), achieved with compact design, silent compressors and pumps, and with high-performance propeller fans, all installed in a closed box.
Low noise level option: High performance acoustic compressor casing can halve the noise produced by the unit.
Active Acoustic Attenuation System with variable fan speed allows progressive adaptation of the unit to the building load while respecting the noise level constraints and the operating limits (as an option).

CASING & DESIGN

Casing made of white painted galvanised steel.
Compact design, granted by the V-shaped coils.
All thermodynamic and hydraulic components installed below the coils.

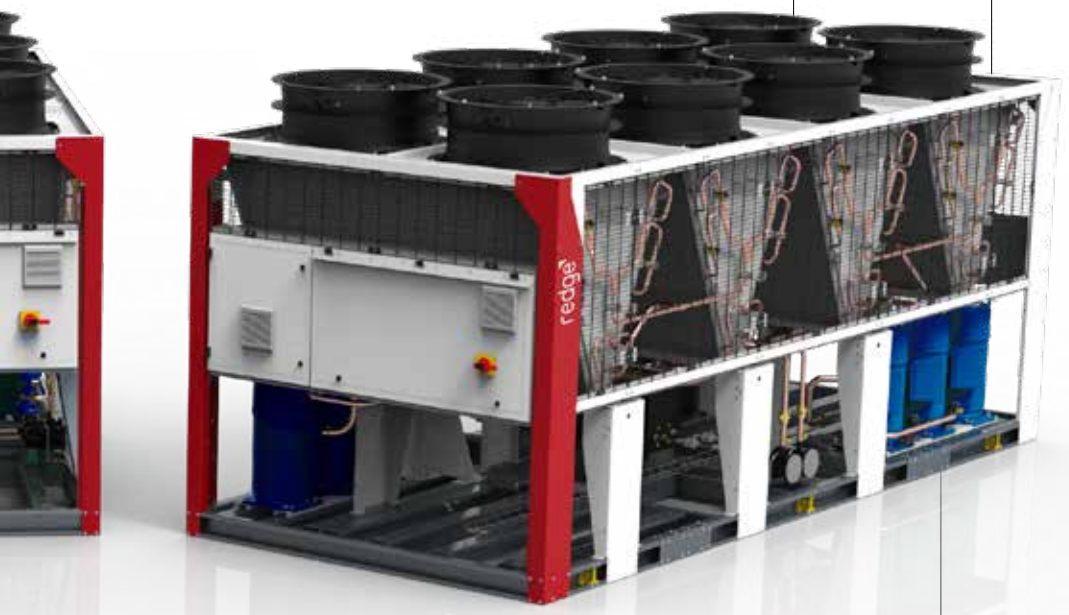

THERMODYNAMIC SYSTEM

Multi-scroll compressors, mounted in tandem or trio, to provide the best seasonal efficiencies.
Aluminium microchannel condenser coil on cooling only units.
High performance propeller fans with profiled blades to improve efficiency and reduce noise level (EC version available as an option).
Thermally insulated and frost-protected water heat exchangers made from stainless steel plates with copper brazing.
One or two independent circuits, each equipped with electronic expansion valves.
Desuperheater (as an option): additional plate heat exchanger on each circuit to recover the rejected heat and provide free hot water for sanitary or industrial purposes.



Photos and illustrations are not contractual.

$G_{(A)}$ $A_{(B)}$ $C_{(C)}$ $220_{(D)}$ $D_{(E)}$ $P_{(F)}$ $2_{(G)}$ $M_{(H)}$

(A) **G** = eComfort
(B) **A** = Standard Air source unit - **B** = Advanced Air source unit
(C) **C** = Cooling only unit - **H** = Heat pump unit
(D) **220** = Approximate power in kW
(E) **D** = Dual circuit
(F) **P** = Refrigerant R32
(G) **2** = Revision number
(H) **M** = 400V/3/50Hz

Air source version

Cooling only units

				F BOX			G BOX		
eCOMFORT - GAC				**220D**	**250D**	**300D**	**330D**	**370D**	**400D**
Nominal thermal performances - Cooling mode									
Cooling capacity (1)			kW	213,8	250,0	292,5	326,8	362,2	405,6
Total absorbed power (1)			kW	67,8	79,0	97,9	105,6	118,7	135,2
EER (1)				3,2	3,2	3,0	3,1	3,1	3,0
Comfort Application	**Standard Fans**	Seasonal Energy Efficiency Ratio (2) **SEER**		5.25	5.05	4.85	4.93	4.95	5.1
Comfort Application	**Standard Fans**	Seasonal energy efficiency (3) **ηs,c**	%	207	199	191	194	195	201
Process Application	**Standard Fans**	Seasonal Energy Performance Ratio (4) **SEPR** - High temperature (7°C)		6.75	6.73	6.44	6.7	6.66	6.37
Nominal thermal performances - Heating mode									
Heating capacity (1)			kW	-	-	-	-	-	-
Total absorbed power (1)			kW	-	-	-	-	-	-
COP (1)				-	-	-	-	-	-
Eurovent energy class (1) - Full load operation				-	-	-	-	-	-
Comfort Application	**Standard Fans**	Seasonal Coeficient of Performance (6) **SCOP**		-	-	-	-	-	-
Comfort Application	**Standard Fans**	Seasonal energy efficiency (7) **ηs,h**	%	-	-	-	-	-	-
Comfort Application	**Standard Fans**	Seasonal efficiency class (8)		-	-	-	-	-	-
Acoustic data									
Global sound power level - Standard unit			dB(A)	90,6	92,3	92,3	92,1	92,1	94,6
Electrical data									
Maximum power			kW	93.7	108.1	128.9	143.2	158.8	180.5
Maximum current			A	155.7	175	210	232.6	258.8	295.1
Starting current			A	320.4	325.6	391.8	414.5	440.8	605
Short circuit current			kA	50					
Refrigeration circuit									
Number of circuits				2	2	2	2	2	2
Number of compressors				2+2	2+2	2+2	2+3	2+3	2+3
Total refrigerant load - R32			kg	20,2	22,4	23,8	31,0	33,5	34,0
Evaporator				Brazed plate heat exchanger					
Nominal water flow rate			m^3/h	36,9	43,1	50,5	56,4	62,5	70,0
Nominal pressure drop			kPa	30,0	30,4	39,3	48,6	54,8	65,9
Hydraulic connection									
Type				Victaulic					
Diameter				4"					

(1) EUROVENT certified data, in accordance with standard EN 14511.
Cooling mode: Evaporator water temperature = 12/7°C | Outdoor air temperature = 35°C / **Heating mode:** Condenser water temperature = 40/45°C | Outdoor air temperature = 7°C
(2) SEER in accordance with standard EN 14825. | **(3)** Following ecodesign regulation EU 2016/2281 on space cooling, normalized leaving water temperature at 7°C, in accordance with standard EN 14825. | **(4)** Following ecodesign regulation EU 2016/2281 on process cooling units, normalized leaving water temperature at 7°C, in accordance with standard EN 14825. | **(5)** Following ecodesign regulation EU 2015/1095 on process cooling chillers, normalized leaving water temperature at -8°C, in accordance with standard EN 14825. | **(6)** SCOP in accordance with standard EN 14825. Heating mode performance is defined for average climate conditions. | **(7)** Following ecodesign regulation EU 813/2013 on space heaters, normalized leaving water temperature at 7°C, in accordance with standard EN 14825, average climate conditions. | **(8)** Following energy labelling regulation EU 811/2013 on space heaters.

G(A) A(B) C(C) 220(D) D(E) P(F) 2(G) M(H)

(A) **G** = eComfort
(B) **A** = Standard Air source unit - **B** = Advanced Air source unit
(C) **C** = Cooling only unit - **H** = Heat pump unit
(D) **220** = Approximate power in kW
(E) **D** = Dual circuit
(F) **P** = Refrigerant R32
(G) **2** = Revision number
(H) **M** = 400V/3/50Hz

Air source version

Cooling only units

				H BOX			I BOX			
eCOMFORT - GAC				**450D**	**480D**	**500D**	**550D**	**600D**	**660D**	**700D**
Nominal thermal performances - Cooling mode										
Cooling capacity (1)			kW	437,8	478,6	531,1	573,7	615,7	659,5	694,9
Total absorbed power (1)			kW	138,9	155,2	171,7	181,5	197,8	214,8	231,4
EER (1)				3,2	3,1	3,1	3,2	3,1	3,1	3,0
Comfort Application	**Standard Fans**	Seasonal Energy Efficiency Ratio (2) **SEER**		5.35	5.3	5.1	5.1	5.2	5.23	5.15
		Seasonal energy efficiency (3) **ηs,c**	%	211	209	201	201	205	206	203
Process Application		Seasonal Energy Performance Ratio (4) **SEPR** - High temperature (7°C)		6.9	6.66	6.61	6.7	6.67	6.64	6.47
Nominal thermal performances - Heating mode										
Heating capacity (1)			kW	-	-	-	-	-	-	-
Total absorbed power (1)			kW	-	-	-	-	-	-	-
COP (1)				-	-	-	-	-	-	-
Eurovent energy class (1) - Full load operation				-	-	-	-	-	-	-
Comfort Application	**Standard Fans**	Seasonal Coeficient of Performance (6) **SCOP**		-	-	-	-	-	-	-
		Seasonal energy efficiency (7) **ηs,h**	%	-	-	-	-	-	-	-
		Seasonal efficiency class (8)		-	-	-	-	-	-	-
Acoustic data										
Global sound power level - Standard unit			dB(A)	91,8	94,5	96,2	96,1	97,6	98,0	98,4
Electrical data										
Maximum power			kW	188.7	210.4	232	247.3	271	288.6	306.2
Maximum current			A	307.8	344	380.3	407.1	446.5	476.6	506.7
Starting current			A	489.6	653.9	690.1	716.9	756.3	786.4	816.5
Short circuit current			kA	50						
Refrigeration circuit										
Number of circuits				2	2	2	2	2	2	2
Number of compressors				3+3	3+3	3+3	3+3	3+3	3+3	3+3
Total refrigerant load - R32			kg	43,3	48,5	49,3	55,8	60,5	61,0	61,5
Evaporator				Brazed plate heat exchanger						
Nominal water flow rate			m^3/h	75,5	82,6	91,6	99,0	106,2	113,8	119,9
Nominal pressure drop			kPa	38,1	45,2	46,2	53,4	61,0	60,3	66,7
Hydraulic connection										
Type				Victaulic						
Diameter				5"						

(1) EUROVENT certified data, in accordance with standard EN 14511.
Cooling mode: Evaporator water temperature = 12/7°C | Outdoor air temperature = 35°C / **Heating mode:** Condenser water temperature = 40/45°C | Outdoor air temperature = 7°C
(2) SEER in accordance with standard EN 14825. | **(3)** Following ecodesign regulation EU 2016/2281 on space cooling, normalized leaving water temperature at 7°C, in accordance with standard EN 14825. | **(4)** Following ecodesign regulation EU 2016/2281 on process cooling units, normalized leaving water temperature at 7°C, in accordance with standard EN 14825. | **(5)** Following ecodesign regulation EU 2015/1095 on process cooling chillers, normalized leaving water temperature at -8°C, in accordance with standard EN 14825. |
(6) SCOP in accordance with standard EN 14825. Heating mode performance is defined for average climate conditions. | **(7)** Following ecodesign regulation EU 813/2013 on space heaters, normalized leaving water temperature at 7°C, in accordance with standard EN 14825, average climate conditions. | **(8)** Following energy labelling regulation EU 811/2013 on space heaters.

$G_{(A)}$ $B_{(B)}$ $C_{(C)}$ $220_{(D)}$ $D_{(E)}$ $P_{(F)}$ $2_{(G)}$ $M_{(H)}$

(A) **G** = eComfort
(B) **A** = Standard Air source unit - **B** = Advanced Air source unit
(C) **C** = Cooling only unit - **H** = Heat pump unit
(D) **220** = Approximate power in kW
(E) **D** = Dual circuit
(F) **P** = Refrigerant R32
(G) **2** = Revision number
(H) **M** = 400V/3/50Hz

Air source version - Advanced Inverter

Cooling only units

				F BOX		G BOX	
eCOMFORT - GBC				**220D**	**250D**	**300D**	**330D**
Nominal thermal performances - Cooling mode							
Cooling capacity (1)			kW	240,1	262,4	297,2	332,5
Total absorbed power (1)			kW	76,1	85,7	93,2	106,3
EER (1)				3,2	3,1	3,2	3,1
Comfort Application	EC Fans	Seasonal Energy Efficiency Ratio (2) **SEER**		5.25	5.13	5.15	5.1
Comfort Application	EC Fans	Seasonal energy efficiency (3) **ηs,c**	%	207	202	203	201
Process Application	EC Fans	Seasonal Energy Performance Ratio (4) **SEPR** - High temperature (7°C)		6.33	6.28	6.45	6.45
Process Application	EC Fans	Seasonal Energy Performance Ratio (5) **SEPR** - Medium temperature (-8°C)		3.84	3.9	3.69	3.75
Nominal thermal performances - Heating mode							
Heating capacity (1)			kW				
Total absorbed power (1)			kW				
COP (1)							
Comfort Application	EC Fans	Seasonal Coeficient of Performance (6) **SCOP**					
Comfort Application	EC Fans	Seasonal energy efficiency (7) **ηs,h**	%				
Comfort Application		Seasonal efficiency class (8)					
Acoustic data							
Global sound power level - Standard unit			dB(A)	92,9	92,9	92,7	92,7
Electrical data							
Maximum power			kW	108.5	119	133.2	148.9
Maximum current			A	176.6	194	216.7	243
Starting current			A	418.4	435.9	458.6	484.8
Short circuit current			kA	50,0	50,0	50,0	50,0
Refrigeration circuit							
Number of circuits				2	2	2	2
Number of compressors				2+2	2+2	2+2	2+3
Total refrigerant load - R32			kg	20	22	28	30
Evaporator							
Nominal water flow rate			m^3/h	41,4	45,3	51,3	57,4
Nominal pressure drop			kPa	28,2	31,9	40,5	46,4
Hydraulic connection							
Type				Victaulic			
Diameter				4"			

(1) EUROVENT certified data, in accordance with standard EN 14511.
Cooling mode: Evaporator water temperature = 12/7°C | Outdoor air temperature = 35°C / **Heating mode:** Condenser water temperature = 40/45°C | Outdoor air temperature = 7°C
(2) SEER in accordance with standard EN 14825. | **(3)** Following ecodesign regulation EU 2016/2281 on space cooling, normalized leaving water temperature at 7°C, in accordance with standard EN 14825. | **(4)** Following ecodesign regulation EU 2016/2281 on process cooling units, normalized leaving water temperature at 7°C, in accordance with standard EN 14825. | **(5)** Following ecodesign regulation EU 2015/1095 on process cooling chillers, normalized leaving water temperature at -8°C, in accordance with standard EN 14825. | **(6)** SCOP in accordance with standard EN 14825. Heating mode performance is defined for average climate conditions. | **(7)** Following ecodesign regulation EU 813/2013 on space heaters, normalized leaving water temperature at 7°C, in accordance with standard EN 14825, average climate conditions. | **(8)** Following energy labelling regulation EU 811/2013 on space heaters.

Air source version

Cooling only units

eCOMFORT - GAC		220D	250D	300D	330D	370D	400D
A	mm	2772			4044		
B		2264			2264		
C		2421			2421		
Weight of standard units							
Basic unit	kg	1588	1690	1728	2243	2263	2334

Air source version

Cooling only units

eCOMFORT - GAC		450D	480D	500D	550D	600D	660D	700D
A	mm	5326			6588			
B		2264			2264			
C		2421			2421			
Weight of standard units								
Basic unit	kg	2853	2915	3020	3465	3531	3622	3683

Air source version - Advanced

Cooling only units

eCOMFORT - GBC		220D	250D	300D	330D
A	mm	2772		4044	
B		2264		2264	
C		2421		2421	
Weight of standard units					
Basic unit	kg	1618	1633	2073	2092



redge

NEXT LEVEL
HVAC SOLUTIONS

redge

eProcess

Water and air condensing screw chillers





R1234ze R515B

AIR COOLED
310 - 1550 kW Inverter

WATER COOLED
280 - 1220 kW Inverter

R513A

AIR COOLED
330 - 1950 kW Inverter

WATER COOLED
200 - 1450 kW Inverter

R134a

AIR COOLED
330 - 1950 kW Inverter

Redge participates in the ECP programme for LCP-HP.
Check ongoing validity of certificate : www.eurovent-certification.com

- **Air or water condensing units, with various refrigerant options,** which meet all environmental and building requirements.
- Precise control of the compressor speed stabilizes the water temperature and ensures comfort.
- **Multiple versions available to ensure the perfect match with every application,** standard version, high efficiency version and super "low noise" version.
- **Inverter compressors available in two versions:**
  - eProcess Plus : one inverter compressor per unit, with a focus on energy saving and high efficiency.
  - eProcess Premiere : All inverter compressors for precision operation and premium efficiency.

THERMODYNAMIC SYSTEM

- Compressors with linear capacity control. The compressors have star-delta starting and cut-off valves on the discharge and suction.
- Counter-flow "shell & tube" evaporator in air and water condensing versions.
- Condensation exchanger with aluminum microchannels
- High-performance fans to improve efficiency and reduce noise levels (EC version available as an option).
- Up to three independent circuits, each equipped with electronic expansion valves.

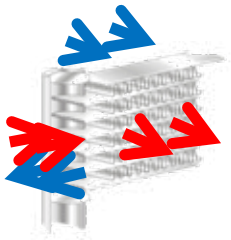

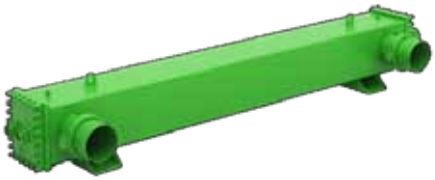



SILENCE MODES

- "Low noise" version

  - Compressor compartment with sound insulation, made of polyurethane foam boards with two noise reduction options (air condensation version only).

- High acoustic efficiency version :

  - Compressor compartment with sound insulation, consisting of polyurethane foam plates and polyethylene layers (all versions).
  - Lower fan rotation speeds and higher condensate exchanger power (air condensing version only).

CONTROL

Display-Programmer for communication via device with LCD display.
Touch display programmer installed on the machine with a 7" screen available as an accessory for all units
Remote control panel with 7" multi-color touch screen display-programmer available as an accessory for all units.





WATER CIRCUIT

Single or double pump, high or low pressure (inverter as an option).
Shut-off valve on the discharge and suction lines in each circuit.
Differential water pressure switch to prevent ice from forming in the pipes and to stop the system in the event of a pump failure or leak (alerts the user with a dedicated warning).
Antifreeze heating as an optional feature in the evaporator, tank, pumps and/or pipes
Low water temperature kit (as an option), to adjust system operation with water temperature from +5°C to -8°C.

Photos and illustrations are not contractual.

$Z_{(A)}$ $A_{(B)}$ $C_{(C)}$ $1100_{(D)}$ $D_{(E)}$ $X_{(F)}$ $1_{(G)}$ $A_{(H)}$

(A) **Z** = eProcess
(B) **A** = Air cooled unit - **B**= Air cooled unit with an inverter compressor - **C**= Air cooled unit all inverter compressors - **W** = Water cooled unit - **X** = Water cooled unit with an inverter compressor
(C) **C** = Cooling-only units
(D) **1100** = Approximate power in kW
(E) **S** = Single circuit - **D** = Double circuit- **T** = Triple circuit
(F) **A** = Refrigerant R134A - **J**= Refrigerant R513A - **X**= Refrigerant R1234ze - **H** = Refrigerant 515B
(G) **1** = Revision number
(H) **A** = Standard version - **HE** = High-efficiency version- **SSL** = Super "Low noise" version

Air cooled version

Cooling only units

eProcess - ZAC			0310D	0350D	0420D	0500D	0560D	0650D	0730D	0800D	0860D	0960D	1110D	1110D	1180T	1290T	1410T	1550T
Nominal thermal performances - Cooling mode																		
Cooling capacity (1)			314,70	354,60	423,50	504,00	564,50	652,40	729,50	801,40	861,30	961,40	1032,30	1113,40	1179,30	1293,30	1409,00	1550,10
Total absorbed power (1)			100,87	114,02	144,54	161,54	188,17	209,77	240,76	256,86	285,20	309,13	331,93	365,05	389,21	415,85	457,47	514,98
EER (1)			3,12	3,11	2,93	3,12	3,00	3,11	3,03	3,12	3,02	3,11	3,11	3,05	3,03	3,11	3,08	3,01
Comfort Application	Seasonal Energy Efficiency Ratio (2) **SEER**		4,68	4,61	4,58	4,68	4,57	4,67	4,60	4,64	4,60	4,64	4,63	4,59	4,64	4,66	4,68	4,67
	Seasonal energy efficiency(3) **ηs,c**	%	184	181	180	184	180	184	181	183	181	183	182	181	183	183	184	184
Acoustic data																		
Global sound power level - Standard unit(4)		dB(A)	97	97	99	99	100	100	100	101	102	102	103	104	103	104	104	105
Electrical data																		
Maximum current		A	252	267	328	377	417	465	506	555	597	668	734	796	804	895	966	1095
Starting current		A	317	317	369	459	480	610	645	773	803	894	1075	1218	1022	1101	1204	1436
Refrigeration circuit																		
Number of circuits			2	2	2	2	2	2	2	2	2	2	2	2	3	3	3	3
Number of compressors			2	2	2	2	2	2	2	2	2	2	2	2	3	3	3	3
Total refrigerant load - R1234ze		kg	44	52	57	68	72	86	95	101	103	120	149	148	152	168	181	218
Evaporator																		
Nominal water flow rate (1)		m³/h	54.2	61.1	72.9	86.7	97.2	112.3	125.6	137.9	148.3	165.5	177.7	191.6	203.0	222.6	242.5	266.8
Nominal pressure drop (1)		kPa	25	35	52	35	42	55	38	36	46	35	39	31	36	37	45	54
Water connections		DN	125	125	125	125	125	125	125	150	150	150	200	200	200	200	200	200

(1) EUROVENT certified data, in accordance with standard EN 14511.
Cooling mode: Evaporator water temperature = 12/7°C | Outdoor air temperature = 35°C
(2) Seasonal energy efficiency of low-temperature room air heating. In accordance with EU Regulation 2016/2281.
(3) Temperature at which cooling capacity is reached equal to that indicated in point (1).
(4) Sound power: in accordance with ISO 3744 and Eurovent 8/1.

Z(A) A(B) C(C) 1100(D) D(E) X(F) 1(G) HE(H)

(A) **Z** = eProcess
(B) **A** = Air cooled unit - **B**= Air cooled unit with an inverter compressor - **C**= Air cooled unit all inverter compressors - **W** = Water cooled unit - **X** = Water cooled unit with an inverter compressor
(C) **C** = Cooling-only units
(D) **1100** = Approximate power in kW
(E) **S** = Single circuit - **D** = Double circuit- **T** = Triple circuit
(F) **A** = Refrigerant R134A - **J**= Refrigerant R513A - **X**= Refrigerant R1234ze - **H** = Refrigerant 515B
(G) **1** = Revision number
(H) **A** = Standard version - **HE** = High-efficiency version- **SSL** = Super "Low noise" version

Air cooled version

Cooling only units

eProcess - ZAC - HE			0330D	0370D	0440D	0520D	0580D	0670D	0760D	0830D	0890D	0980D	1060D	1150D	1210T	1330T	1430T
Nominal thermal performances - Cooling mode																	
Cooling capacity (1)			335,60	372,60	441,60	520,50	584,60	675,50	759,50	829,40	893,50	980,40	1064,40	1149,30	1211,40	1332,20	1429,20
Total absorbed power (1)			99,88	112,23	134,22	154,45	177,15	200,45	232,26	247,58	269,94	292,66	319,64	350,40	370,46	407,40	443,85
EER (1)			3,36	3,32	3,29	3,37	3,30	3,37	3,27	3,35	3,31	3,35	3,33	3,28	3,27	3,27	3,22
Comfort Application	Seasonal Energy Efficiency Ratio (2) **SEER**		4,83	4,81	4,73	4,83	4,79	4,83	4,79	4,82	4,76	4,78	4,80	4,78	4,84	4,84	4,85
	Seasonal energy efficiency(3) **ηs,c**	%	190	189	186	190	189	190	189	190	187	188	189	188	191	191	191
Acoustic data																	
Global sound power level - Standard unit(4)		dB(A)	98.0	98.0	99.0	99.0	100.0	100.0	100.0	101.0	102.0	102.0	103.0	104.0	103.0	104.0	104.0
Electrical data																	
Maximum current		A	259.0	274.0	334.0	383.0	424.0	472.0	513.0	562.0	604.0	674.0	741.0	803.0	811.0	902.0	973.0
Starting current		A	324.0	324.0	376.0	465.0	486.0	617.0	652.0	780.0	810.0	901.0	1082.0	1225.0	1029.0	1108.0	1211.0
Refrigeration circuit																	
Number of circuits			2	2	2	2	2	2	2	2	2	2	2	2	3	3	3
Number of compressors			2	2	2	2	2	2	2	2	2	2	2	2	3	3	3
Total refrigerant load - R1234ze		kg	53	61	68	79	84	95	101	114	120	129	159	163	168	181	193
Evaporator																	
Nominal water flow rate (1)		m³/h	57.8	64.2	76.0	89.6	100.6	116.3	130.7	142.8	153.8	168.7	183.2	197.8	208.5	229.3	246.0
Nominal pressure drop (1)		kPa	35	40	30	40	25	30	36	43	31	36	31	41	31	42	47
Water connections		DN	125	125	125	125	125	150	150	150	150	200	200	200	200	200	200

(1) EUROVENT certified data, in accordance with standard EN 14511.
Cooling mode: Evaporator water temperature = 12/7°C | Outdoor air temperature = 35°C
(2) Seasonal energy efficiency of low-temperature room air heating. In accordance with EU Regulation 2016/2281.
(3) Temperature at which cooling capacity is reached equal to that indicated in point (1).
(4) Sound power: in accordance with ISO 3744 and Eurovent 8/1.

$Z_{(A)}$ $A_{(B)}$ $C_{(C)}$ $1100_{(D)}$ $D_{(E)}$ $X_{(F)}$ $1_{(G)}$ $SSL_{(H)}$

(A) **Z** = eProcess
(B) **A** = Air cooled unit - **B**= Air cooled unit with an inverter compressor - **C**= Air cooled unit all inverter compressors - **W** = Water cooled unit - **X** = Water cooled unit with an inverter compressor
(C) **C** = Cooling-only units
(D) **1100** = Approximate power in kW
(E) **S** = Single circuit - **D** = Double circuit- **T** = Triple circuit
(F) **A** = Refrigerant R134A - **J**= Refrigerant R513A - **X**= Refrigerant R1234ze - **H** = Refrigerant 515B
(G) **1** = Revision number
(H) **A** = Standard version - **HE** = High-efficiency version- **SSL** = Super "Low noise" version

Air cooled version

Cooling only units

eProcess - ZAC - SSL			0330D	0370D	0440D	0520D	0580D	0670D	0760D	0830D	0890D	0980D	1060D	1150D	1210T	1330T	1430T
Nominal thermal performances - Cooling mode																	
Cooling capacity (1)			327,70	361,60	428,60	499,50	567,00	655,50	737,00	796,40	857,50	941,40	1021,40	1103,30	1163,40	1279,30	1372,20
Total absorbed power (1)			100,83	113,35	138,26	159,58	184,09	208,76	244,04	257,73	281,15	304,66	334,89	364,13	387,80	426,43	460,47
EER (1)			3,25	3,19	3,10	3,13	3,08	3,14	3,02	3,09	3,05	3,09	3,05	3,03	3,00	3,00	2,98
Comfort Application	Seasonal Energy Efficiency Ratio (2) **SEER**		4,79	4,78	4,68	4,77	4,73	4,77	4,72	4,74	4,69	4,71	4,72	4,71	4,77	4,77	4,79
Comfort Application	Seasonal energy efficiency(3) **ηs,c**	%	189	188	184	188	186	188	186	187	185	185	186	185	188	188	189
Acoustic data																	
Global sound power level - Standard unit(4)		dB(A)	89.0	89.0	90.0	90.0	91.0	91.0	91.0	93.0	94.0	94.0	95.0	95.0	95.0	96.0	96.0
Electrical data																	
Maximum current		A	259.0	274.0	334.0	383.0	424.0	472.0	513.0	562.0	604.0	674.0	741.0	803.0	811.0	902.0	973.0
Starting current		A	324.0	324.0	376.0	465.0	486.0	617.0	652.0	780.0	810.0	901.0	1082	1225	1029	1108	1211.0
Refrigeration circuit																	
Number of circuits			2	2	2	2	2	2	2	2	2	2	2	2	3	3	3
Number of compressors			2	2	2	2	2	2	2	2	2	2	2	2	3	3	3
Total refrigerant load - R1234ze		kg	53	61	68	79	84	95	101	114	120	129	159	163	168	181	193
Evaporator																	
Nominal water flow rate (1)		m³/h	56.4	62.0	73.8	86.0	97.5	112.8	127.0	137.1	147.6	162.0	175.8	189.9	200.2	220.0	236.2
Nominal pressure drop (1)		kPa	33	38	28	37	23	28	34	40	29	33	29	38	29	39	43
Water connections		DN	125	125	125	125	125	150	150	150	150	200	200	200	200	200	200

(1) EUROVENT certified data, in accordance with standard EN 14511.
Cooling mode: Evaporator water temperature = 12/7°C | Outdoor air temperature = 35°C
(2) Seasonal energy efficiency of low-temperature room air heating. In accordance with EU Regulation 2016/2281.
(3) Temperature at which cooling capacity is reached equal to that indicated in point (1).
(4) Sound power: in accordance with ISO 3744 and Eurovent 8/1.

Z(A) B(B) C(C) 1100(D) D(E) X(F) 1(G) HE(H)

(A) **Z** = eProcess
(B) **A** = Air cooled unit - **B**= Air cooled unit with an inverter compressor - **C**= Air cooled unit all inverter compressors - **W** = Water cooled unit - **X** = Water cooled unit with an inverter compressor
(C) **C** = Cooling-only units
(D) **1100** = Approximate power in kW
(E) **S** = Single circuit - **D** = Double circuit- **T** = Triple circuit
(F) **A** = Refrigerant R134A - **J**= Refrigerant R513A - **X**= Refrigerant R1234ze - **H** = Refrigerant 515B
(G) **1** = Revision number
(H) **A** = Standard version - **HE** = High-efficiency version- **SSL** = Super "Low noise" version

Air cooled version

Cooling only units

eProcess Plus - ZBC - HE			0390D	0430D	0510D	0600D	0700D	0810D	0900D	0990D	1100D	1170D	1260T	1380T
Nominal thermal performances - Cooling mode														
Cooling capacity (1)			389,70	434,60	508,50	604,40	699,50	807,40	896,40	989,50	1101,40	1169,30	1259,30	1380,20
Total absorbed power (1)			119,91	138,41	155,98	184,27	214,57	256,32	280,13	309,22	349,65	360,90	397,26	429,97
EER (1)			3,25	3,14	3,26	3,28	3,26	3,15	3,20	3,20	3,15	3,24	3,17	3,21
Comfort Application	Seasonal Energy Efficiency Ratio (2) **SEER**		5,00	4,95	5,02	5,03	4,99	5,01	5,02	5,00	5,01	5,02	5,04	5,10
Comfort Application	Seasonal energy efficiency(3) **ηs,c**	%	197	195	198	198	197	197	198	197	197	198	199	201
Acoustic data														
Global sound power level - Standard unit(4)		dB(A)	101.0	102.0	102.0	103.0	103.0	104.0	105.0	105.0	105.0	105.0	106.0	106.0
Electrical data														
Maximum current		A	304.0	350.0	377.0	445.0	486.0	605.0	702.0	723.0	826.0	864.0	903.0	992.0
Starting current		A	337.0	422.0	432.0	486.0	610.0	773.0	881.0	885.0	1079.0	1198.0	1072.0	1119.0
Refrigeration circuit														
Number of circuits			2	2	2	2	2	2	2	2	2	2	3	3
Number of compressors			2	2	2	2	2	2	2	2	2	2	3	3
Total refrigerant load - R1234ze		kg	57	61	79	92	101	113	119	128	158	176	181	191
Evaporator														
Nominal water flow rate (1)		m³/h	67.1	74.8	87.5	104.1	120.4	139.0	154.3	170.3	189.5	201.2	216.7	237.5
Nominal pressure drop (1)		kPa	25	35	45	51	30	43	31	26	31	43	41	47
Water connections		DN	125	125	125	150	150	150	150	150	200	200	200	200

(1) EUROVENT certified data, in accordance with standard EN 14511.
Cooling mode: Evaporator water temperature = 12/7°C | Outdoor air temperature = 35°C
(2) Seasonal energy efficiency of low-temperature room air heating. In accordance with EU Regulation 2016/2281.
(3) Temperature at which cooling capacity is reached equal to that indicated in point (1).
(4) Sound power: in accordance with ISO 3744 and Eurovent 8/1.

$Z_{(A)}$ $B_{(B)}$ $C_{(C)}$ $1100_{(D)}$ $D_{(E)}$ $X_{(F)}$ $1_{(G)}$ $HE_{(H)}$

(A) **Z** = eProcess
(B) **A** = Air cooled unit - **B**= Air cooled unit with an inverter compressor - **C**= Air cooled unit all inverter compressors - **W** = Water cooled unit - **X** = Water cooled unit with an inverter compressor
(C) **C** = Cooling-only units
(D) **1100** = Approximate power in kW
(E) **S** = Single circuit - **D** = Double circuit- **T** = Triple circuit
(F) **A** = Refrigerant R134A - **J**= Refrigerant R513A - **X**= Refrigerant R1234ze - **H** = Refrigerant 515B
(G) **1** = Revision number
(H) **A** = Standard version - **HE** = High-efficiency version- **SSL** = Super "Low noise" version

Air cooled version

Cooling only units

eProcess Plus - ZBC - SSL			0390D	0430D	0510D	0600D	0700D	0810D	0900D	0990D	1100D	1170D	1260T	1380T
Nominal thermal performances - Cooling mode														
Cooling capacity (1)			377,70	421,60	493,50	580,00	678,50	783,40	869,50	959,50	1068,40	1122,30	1221,30	1325,20
Total absorbed power (1)			124,65	143,40	161,80	190,79	225,42	266,46	293,75	324,16	363,40	374,10	414,00	450,75
EER (1)			3,03	2,94	3,05	3,04	3,01	2,94	2,96	2,96	2,94	3,00	2,95	2,94
Comfort Application	Seasonal Energy Efficiency Ratio (2) **SEER**		4,93	4,89	4,96	4,96	4,92	4,95	4,94	4,93	4,95	4,95	4,97	5,02
	Seasonal energy efficiency (3) **ηs,c**	%	194	193	195	195	194	195	195	194	195	195	196	198
Acoustic data														
Global sound power level - Standard unit (4)		dB(A)	92.0	93.0	93.0	94.0	95.0	96.0	96.0	96.0	97.0	97.0	98.0	98.0
Electrical data														
Maximum current		A	304.0	350.0	377.0	445.0	486.0	605.0	702.0	723.0	826.0	864.0	903.0	992.0
Starting current		A	337.0	422.0	432.0	486.0	610.0	773.0	881.0	885.0	1079.0	1198.0	1072.0	1119.0
Refrigeration circuit														
Number of circuits			2	2	2	2	2	2	2	2	2	2	3	3
Number of compressors			2	2	2	2	2	2	2	2	2	2	3	3
Total refrigerant load - R1234ze		kg	57	61	79	92	101	113	119	128	158	176	181	191
Evaporator														
Nominal water flow rate (1)		m³/h	65.0	72.6	85.0	99.9	116.8	135.0	149.6	165.1	183.9	193.2	210.2	228.1
Nominal pressure drop (1)		kPa	23	33	42	47	28	41	29	25	29	40	39	43
Water connections		DN	125	125	125	150	150	150	150	150	200	200	200	200

(1) EUROVENT certified data, in accordance with standard EN 14511.
Cooling mode: Evaporator water temperature = 12/7°C | Outdoor air temperature = 35°C
(2) Seasonal energy efficiency of low-temperature room air heating. In accordance with EU Regulation 2016/2281.
(3) Temperature at which cooling capacity is reached equal to that indicated in point (1).
(4) Sound power: in accordance with ISO 3744 and Eurovent 8/1.

Z(A) C(B) C(C) 1100(D) D(E) X(F) 1(G) HE(H)

(A) **Z** = eProcess
(B) **A** = Air cooled unit - **B**= Air cooled unit with an inverter compressor - **C**= Air cooled unit all inverter compressors - **W** = Water cooled unit - **X** = Water cooled unit with an inverter compressor
(C) **C** = Cooling-only units
(D) **1100** = Approximate power in kW
(E) **S** = Single circuit - **D** = Double circuit- **T** = Triple circuit
(F) **A** = Refrigerant R134A - **J**= Refrigerant R513A - **X**= Refrigerant R1234ze - **H** = Refrigerant 515B
(G) **1** = Revision number
(H) **A** = Standard version - **HE** = High-efficiency version- **SSL** = Super "Low noise" version

Air cooled version

Cooling only units

eProcess Premiere - ZCC - HE			0325S	0395S	0445D	0505D	0565D	0645D	0705D	0835D	0905D	1015D	1105D	1205D	1295T	1405T
Nominal thermal performances - Cooling mode																
Cooling capacity (1)			322,60	391,60	443,60	507,50	567,60	642,00	707,50	832,50	900,00	1013,50	1105,30	1202,00	1294,30	1401,20
Total absorbed power (1)			99,26	123,14	142,18	157,61	180,19	197,54	223,89	258,54	283,91	321,75	352,01	380,38	416,17	453,46
EER (1)			3,25	3,18	3,12	3,22	3,15	3,25	3,16	3,22	3,17	3,15	3,14	3,16	3,11	3,09
Comfort Application	Seasonal Energy Efficiency Ratio (2) **SEER**		5,09	5,12	5,25	5,31	5,21	5,32	5,30	5,33	5,26	5,21	5,32	5,31	5,33	5,27
Comfort Application	Seasonal energy efficiency(3) **ηs,c**	%	201	202	207	209	205	210	209	210	207	205	210	209	210	208
Acoustic data																
Global sound power level - Standard unit(4)		dB(A)	101.0	102.0	103.0	103.0	103.0	104.0	104.0	105.0	106.0	106.0	106.0	106.0	107.0	107.0
Electrical data																
Maximum current		A	229.0	306.0	348.0	370.0	452.0	459.0	536.0	677.0	694.0	776.0	848.0	920.0	994.0	1076.0
Starting current		A	40.0	47.0	128.0	138.0	159.0	165.0	207.0	251.0	255.0	255.0	294.0	301.0	517.0	571.0
Refrigeration circuit																
Number of circuits			1	1	2	2	2	2	2	2	2	2	2	2	3	3
Number of compressors			1	1	2	2	2	2	2	2	2	2	2	2	3	3
Total refrigerant load - R1234ze		kg	46	58	61	79	85	99	111	120	131	130	158	176	189	192
Evaporator																
Nominal water flow rate (1)		m³/h	55.6	67.4	76.4	87.4	97.7	110.4	121.8	143.3	155.0	174.4	190.2	206.9	222.7	241.1
Nominal pressure drop (1)		kPa	40	35	35	42	25	32	36	26	31	26	41	46	42	47
Water connections		DN	125	125	125	125	125	150	150	150	150	150	200	200	200	200

(1) EUROVENT certified data, in accordance with standard EN 14511.
Cooling mode: Evaporator water temperature = 12/7°C | Outdoor air temperature = 35°C
(2) Seasonal energy efficiency of low-temperature room air heating. In accordance with EU Regulation 2016/2281.
(3) Temperature at which cooling capacity is reached equal to that indicated in point (1).
(4) Sound power: in accordance with ISO 3744 and Eurovent 8/1.

Z(A) C(B) C(C) 1100(D) D(E) X(F) 1(G) SSL(H)

(A) **Z** = eProcess
(B) **A** = Air cooled unit - **B**= Air cooled unit with an inverter compressor - **C**= Air cooled unit all inverter compressors - **W** = Water cooled unit - **X** = Water cooled unit with an inverter compressor
(C) **C** = Cooling-only units
(D) **1100** = Approximate power in kW
(E) **S** = Single circuit - **D** = Double circuit- **T** = Triple circuit
(F) **A** = Refrigerant R134A - **J**= Refrigerant R513A - **X**= Refrigerant R1234ze - **H** = Refrigerant 515B
(G) **1** = Revision number
(H) **A** = Standard version - **HE** = High-efficiency version- **SSL** = Super "Low noise" version

Air cooled version

Cooling only units

eProcess Premiere - ZCC - SSL			0325S	0395S	0445D	0505D	0565D	0645D	0705D	0835D	0905D	1015D	1105D	1205D	1295T	1405T
Nominal thermal performances - Cooling mode																
Cooling capacity (1)			312,60	379,60	430,60	492,50	550,60	622,50	686,50	807,50	873,50	983,50	1072,30	1166,30	1255,30	1359,20
Total absorbed power (1)			103,17	128,24	147,97	163,62	187,28	206,81	232,71	268,27	295,10	334,52	365,97	395,36	432,86	470,31
EER (1)			3,03	2,96	2,91	3,01	2,94	3,01	2,95	3,01	2,96	2,94	2,93	2,95	2,90	2,89
Comfort Application	Seasonal Energy Efficiency Ratio (2) **SEER**		5,09	5,12	5,25	5,31	5,21	5,32	5,30	5,26	5,18	5,14	5,25	5,24	5,27	5,20
Comfort Application	Seasonal energy efficiency (3) **ηs,c**	%	201	202	207	209	205	210	209	207	204	203	207	207	208	205
Acoustic data																
Global sound power level - Standard unit(4)		dB(A)	92.0	93.0	94.0	94.0	95.0	95.0	96.0	97.0	97.0	97.0	98.0	98.0	99.0	99.0
Electrical data																
Maximum current		A	229.0	306.0	348.0	370.0	452.0	459.0	536.0	677.0	694.0	776.0	848.0	920.0	994.0	1076.0
Starting current		A	40.0	47.0	128.0	138.0	159.0	165.0	207.0	251.0	255.0	255.0	294.0	301.0	517.0	571.0
Refrigeration circuit																
Number of circuits			1	1	2	2	2	2	2	2	2	2	2	2	3	3
Number of compressors			1	1	2	2	2	2	2	2	2	2	2	2	3	3
Total refrigerant load - R1234ze		kg	46	58	61	79	85	99	111	120	131	130	158	176	189	192
Evaporator																
Nominal water flow rate (1)		m³/h	53.8	65.4	74.1	84.8	94.8	107.2	118.2	139.0	150.3	169.2	184.6	200.7	216.0	233.9
Nominal pressure drop (1)		kPa	38	33	33	40	24	30	33	25	29	25	39	43	39	44
Water connections		DN	125	125	125	125	125	150	150	150	150	150	200	200	200	200

(1) EUROVENT certified data, in accordance with standard EN 14511.
Cooling mode: Evaporator water temperature = 12/7°C | Outdoor air temperature = 35°C
(2) Seasonal energy efficiency of low-temperature room air heating. In accordance with EU Regulation 2016/2281.
(3) Temperature at which cooling capacity is reached equal to that indicated in point (1).
(4) Sound power: in accordance with ISO 3744 and Eurovent 8/1.

Z(A) X(B) C(C) 1100(D) D(E) X(F) 1(G) HE(H)

(A) **Z** = eProcess
(B) **A** = Air cooled unit - **B**= Air cooled unit with an inverter compressor - **C**= Air cooled unit all inverter compressors - **W** = Water cooled unit - **X** = Water cooled unit with an inverter compressor
(C) **C** = Cooling-only units
(D) **1100** = Approximate power in kW
(E) **S** = Single circuit - **D** = Double circuit- **T** = Triple circuit
(F) **A** = Refrigerant R134A - **J**= Refrigerant R513A - **X**= Refrigerant R1234ze - **H** = Refrigerant 515B
(G) **1** = Revision number
(H) **A** = Standard version - **HE** = High-efficiency version- **SSL** = Super "Low noise" version

Water cooled version

Cooling only units

eProcess - ZXC			0280S	0340S	0430S	0520D	0580D	0650D	0710D	0800D	0890D	0970D	1090D	1220D
Nominal thermal performances - Cooling mode														
Cooling capacity (1)			285,60	346,60	434,50	524,40	584,40	648,40	719,40	800,40	897,30	974,30	1091,20	1217,20
Total absorbed power (1)			54,92	66,78	86,04	95,87	107,43	119,41	130,80	150,17	168,67	180,76	196,97	219,71
EER (1)			5,20	5,19	5,05	5,47	5,44	5,43	5,50	5,33	5,32	5,39	5,54	5,54
Comfort Application	Seasonal Energy Efficiency Ratio (2) **SEER**		7,64	7,62	7,58	7,42	7,56	7,63	7,37	7,41	7,24	7,25	7,33	7,31
Comfort Application	Seasonal energy efficiency(3) **ηs,c**	%	303	302	300	294	299	302	292	293	287	287	290	289
Acoustic data														
Global sound power level - Standard unit(4)		dB(A)	97	99	101	98	98	100	100	102	103	103	102	103
Electrical data														
Maximum current		A	148	165	208	247	278	295	313	356	393	425	494	543
Starting current		A	20	20	20	373	462	479	483	526	673	794	863	1082
Refrigeration circuit														
Number of circuits			1	1	1	2	2	2	2	2	2	2	2	2
Number of compressors			1	1	1	2	2	2	2	2	2	2	2	2
Total refrigerant load - R1234ze		kg	84	94	103	112	112	171	171	179	179	179	233	233
Condensador														
Nominal water flow rate (1)			58.0	71.0	89.0	106.0	118.0	131.0	145.0	162.0	182.0	197.0	220.0	245.0
Nominal pressure drop (1)			17	17	17	37	45	40	38	39	40	42	38	46
Water connections		kg	100	125	125	1250	125	150	150	150	150	150	150	150
Evaporator														
Nominal water flow rate (1)		m³/h	49.2	59.7	74.8	90.3	100.6	111.6	124.0	137.8	154.5	167.7	187.8	209.5
Nominal pressure drop (1)		kPa	48	50	50	53	52	50	47	47	48	55	50	50
Water connections		DN	125	125	125	125	125	150	150	150	150	150	150	150

(1) EUROVENT certified data, in accordance with standard EN 14511.
Cooling mode: Evaporator water temperature = 12/7°C | Outdoor air temperature = 35°C
(2) Seasonal energy efficiency of low-temperature room air heating. In accordance with EU Regulation 2016/2281.
(3) Temperature at which cooling capacity is reached equal to that indicated in point (1).
(4) Sound power: in accordance with ISO 3744. The sound power level data for this range are not part of the Eurovent certification program.

Air cooled version

Cooling only units

eProcess - ZAC		0310D	0350D	0420D	0500D	0560D	0650D	0730D	0800D	0860D	0960D	1030D	1110D	1180T	1290T	1410T	1550T
A	mm	3800	3800	3800	4900	4900	6000	6000	7160	7160	8260	9360	9360	9360	10530	11630	12730
B		2260	2260	2260	2260	2260	2260	2260	2260	2260	2260	2260	2260	2260	2260	2260	2260
C		2480	2480	2480	2480	2480	2480	2480	2480	2480	2480	2480	2480	2480	2480	2480	2480
Weight of standard units																	
Transport weight	kg	3000	3090	3810	4210	4340	5110	5620	6230	6350	6820	7450	7690	9360	9900	10410	11090

Air cooled version

Cooling only units

eProcess - ZAC - HE/ SSL		0330D	0370D	0440D	0520D	0580D	0670D	0760D	0830D	0890D	0980D	1060D	1150D	1210T	1330T	1430T
A	mm	4900	4900	4900	6000	6000	7160	7160	8260	8260	9360	10460	10460	10530	11630	12730
B		2260	2260	2260	2260	2260	2260	2260	2260	2260	2260	2260	2260	2260	2260	2260
C		2480	2480	2480	2480	2480	2480	2480	2480	2480	2480	2480	2480	2480	2480	2480
Weight of standard units																
Transport weight HE version	kg	3370	3450	4200	4550	4680	5680	6130	6590	6850	7220	7840	7950	9780	10180	10560
Transport weight SSL version	kg	3645	3725	4525	4875	5005	6110	6560	7020	7280	7650	8270	8380	10325	10725	11105

Air cooled version

Cooling only units

eProcess - ZBC - HE/ SSL		0390D	0430D	0510D	0600D	0700D	0810D	0900D	0990D	1100D	1170D	1260T	1380T
A	mm	4990	4990	6090	7250	7250	8350	9450	9450	10550	11650	11630	12730
B		2260	2260	2260	2260	2260	2260	2260	2260	2260	2260	2260	2260
C		2480	2480	2480	2480	2480	2480	2480	2480	2480	2480	2480	2480
Weight of standard units													
Transport weight HE version	kg	3900	4240	4640	5210	5830	6260	7070	7350	7700	8070	9760	10450
Transport weight SSL version	kg	4225	4565	4965	5640	6260	6690	7500	7780	8130	8500	10305	10995

Air cooled version

Cooling only units

eProcess - ZCC - HE/ SSL		0325S	0395S	0445D	0505D	0565D	0645D	0705D	0835D	0905D	1015D	1105D	1205D	1295T	1405T
A	mm	4900	4900	4900	6000	6000	7160	7160	9450	9450	9450	10550	11650	12730	12730
B		2260	2260	2260	2260	2260	2260	2260	2260	2260	2260	2260	2260	2260	2260
C		2480	2480	2480	2480	2480	2480	2480	2480	2480	2480	2480	2480	2480	2480
Weight of standard units															
Transport weight HE version	kg	2850	3690	4170	4610	4660	5210	5660	6360	6500	7170	7450	7720	9420	9830
Transport weight SSL version	kg	3030	3870	4495	4935	4985	5640	6090	6790	6930	7600	7880	8150	9965	10375

Water cooled version

Cooling only units

eProcess - ZXC		1280	1340	1430	2520	2580	2650	2710	2800	2890	2970	21090	21220
A	mm	3859	3859	3859	4008	4008	3990	4329	4407	4407	4407	4501	4586
B		1531	1531	1591	1676	1676	1676	1676	1814	1844	1844	1964	2009
C		1830	1830	1830	1910	1910	2040	2040	2040	2040	2040	2080	2080
Weight of standard units													
Transport weight	kg	2335	2440	2535	4095	4190	4735	5205	5355	5620	5765	6790	7135

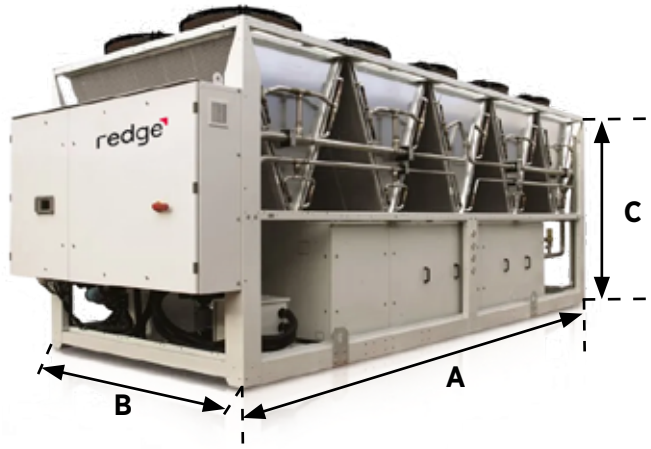

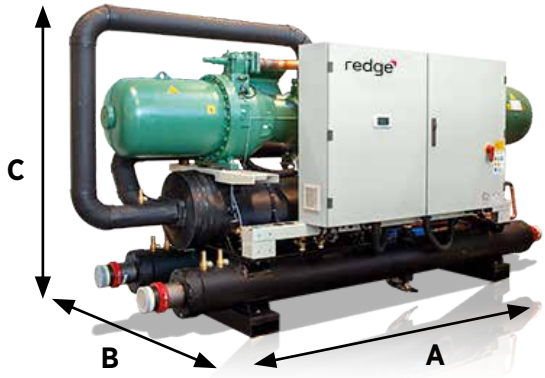

$Z_{(A)}$ $A_{(B)}$ $C_{(C)}$ $1100_{(D)}$ $D_{(E)}$ $A_{(F)}$ $1_{(G)}$ $A_{(H)}$

(A) **Z** = eProcess
(B) **A** = Air cooled unit - **B**= Air cooled unit with an inverter compressor - **C**= Air cooled unit all inverter compressors - **W** = Water cooled unit - **X** = Water cooled unit with an inverter compressor
(C) **C** = Cooling-only units
(D) **1100** = Approximate power in kW
(E) **S** = Single circuit - **D** = Double circuit- **T** = Triple circuit
(F) **A** = Refrigerant R134A - **J**= Refrigerant R513A - **X**= Refrigerant R1234ze - **H** = Refrigerant 515B
(G) **1** = Revision number
(H) **A** = Standard version - **HE** = High-efficiency version- **SSL** = Super "Low noise" version

Air cooled version

Cooling only units

eProcess - ZAC			0335D	0365D	0405D	0465D	0515D	0565D	0645D	0705D	0755D	0805D	0865D
Nominal thermal performances - Cooling mode													
Cooling capacity (1)			334,60	371,60	408,50	467,00	522,30	567,40	653,40	711,40	761,40	803,40	869,30
Total absorbed power (1)			108,28	124,70	139,42	152,12	175,86	195,66	215,64	239,53	258,10	264,28	293,68
EER (1)			3,09	2,98	2,93	3,07	2,97	2,90	3,03	2,97	2,95	3,04	2,96
Comfort Application	Seasonal Energy Efficiency Ratio (2) **SEER**		4,68	4,63	4,60	4,67	4,62	4,58	4,66	4,62	4,61	4,63	4,60
	Seasonal energy efficiency(3) **ηs,c**	%	184	182	181	184	182	180	183	182	181	182	181
Acoustic data													
Global sound power level - Standard unit(4)		dB(A)	97	97	98	98	98	98	99	99	100	100	101
Electrical data													
Maximum current		A	224	252	280	286	353	396	452	452	452	507	555
Starting current		A	246	287	331	338	399	479	507	507	507	637	677
Refrigeration circuit													
Number of circuits			2	2	2	2	2	2	2	2	2	2	2
Number of compressors			2	2	2	2	2	2	2	2	2	2	2
Total refrigerant load - R1234A		kg	41	41	45	64	61	62	79	82	85	99	100
Evaporator													
Nominal water flow rate (1)		m^3/h	57.6	64.0	70.3	80.3	90.0	97.7	112.5	122.5	131.1	138.3	149.6
Nominal pressure drop (1)		kPa	41	50	48	54	75	55	56	44	50	39	48
Water connections		DN	125	125	125	125	125	150	150	150	150	200	200

(1) EUROVENT certified data, in accordance with standard EN 14511.
Cooling mode: Evaporator water temperature = 12/7°C | Outdoor air temperature = 35°C
(2) Seasonal energy efficiency of low-temperature room air heating. In accordance with EU Regulation 2016/2281.
(3) Temperature at which cooling capacity is reached equal to that indicated in point (1).
(4) Sound power: in accordance with ISO 3744 and Eurovent 8/1.

Z(A) A(B) C(C) 1100(D) D(E) A(F) 1(G) A(H)

(A) **Z** = eProcess
(B) **A** = Air cooled unit - **B**= Air cooled unit with an inverter compressor - **C**= Air cooled unit all inverter compressors - **W** = Water cooled unit - **X** = Water cooled unit with an inverter compressor
(C) **C** = Cooling-only units
(D) **1100** = Approximate power in kW
(E) **S** = Single circuit - **D** = Double circuit- **T** = Triple circuit
(F) **A** = Refrigerant R134A - **J**= Refrigerant R513A - **X**= Refrigerant R1234ze - **H** = Refrigerant 515B
(G) **1** = Revision number
(H) **A** = Standard version - **HE** = High-efficiency version- **SSL** = Super "Low noise" version

Air cooled version

Cooling only units

eProcess - ZAC			0935D	0995D	1075D	1115D	1275D	1405D	1505D	1605T	1705T	1805T	1955T
Nominal thermal performances - Cooling mode													
Cooling capacity (1)			948,30	999,20	1086,30	1126,20	1293,00	1406,10	1507,20	1605,10	1700,20	1806,10	1953,10
Total absorbed power (1)			310,92	334,18	349,29	375,40	414,42	465,60	504,08	507,94	541,46	573,37	666,59
EER (1)			3,05	2,99	3,11	3,00	3,12	3,02	2,99	3,16	3,14	3,15	2,93
Comfort Application	Seasonal Energy Efficiency Ratio (2) **SEER**		4,64	4,61	4,63	4,63	4,66	4,60	4,60	4,67	4,63	4,65	4,60
Comfort Application	Seasonal energy efficiency(3) **ηs,c**	%	183	181	182	182	183	181	181	184	182	183	181
Acoustic data													
Global sound power level - Standard unit(4)		dB(A)	101	101	102	102	102	103	104	104	104	105	106
Electrical data													
Maximum current		A	610	658	703	742	749	842	910	903	951	1046	1167
Starting current		A	805	832	903	925	932	1141	1250	1098	1146	1246	1462
Refrigeration circuit													
Number of circuits			2	2	2	2	2	2	2	3	3	3	3
Number of compressors			2	2	2	2	2	2	2	3	3	3	3
Total refrigerant load - R1234A		kg	110	110	123	123	135	192	196	212	217	229	252
Evaporator													
Nominal water flow rate (1)		m^3/h	163.2	172.0	187.0	193.8	222.6	242.0	259.4	276.2	292.6	310.8	336.1
Nominal pressure drop (1)		kPa	56	61	50	54	72	68	44	60	42	49	61
Water connections		DN	200	200	200	200	200	200	200	200	200	200	200

(1) EUROVENT certified data, in accordance with standard EN 14511.
Cooling mode: Evaporator water temperature = 12/7°C | Outdoor air temperature = 35°C
(2) Seasonal energy efficiency of low-temperature room air heating. In accordance with EU Regulation 2016/2281.
(3) Temperature at which cooling capacity is reached equal to that indicated in point (1).
(4) Sound power: in accordance with ISO 3744 and Eurovent 8/1.

$Z_{(A)}$ $A_{(B)}$ $C_{(C)}$ $1100_{(D)}$ $D_{(E)}$ $A_{(F)}$ $1_{(G)}$ $HE_{(H)}$

(A) **Z** = eProcess
(B) **A** = Air cooled unit - **B**= Air cooled unit with an inverter compressor - **C**= Air cooled unit all inverter compressors - **W** = Water cooled unit - **X** = Unidade de condensação a ar com um compressor inverter
(C) **C** = Cooling-only units
(D) **1100** = Approximate power in kW
(E) **S** = Single circuit - **D** = Double circuit- **T** = Triple circuit
(F) **A** = Refrigerant R134A - **J**= Refrigerant R513A - **X**= Refrigerant R1234ze - **H** = Refrigerant 515B
(G) **1** = Revision number
(H) **A** = Standard version - **HE** = High-efficiency version- **SSL** = Super "Low noise" version

Air cooled version

Cooling only units

eProcess - ZAC - HE			0345D	0385D	0425D	0475D	0525D	0585D	0655D	0715D	0765D	0815D
Nominal thermal performances - Cooling mode												
Cooling capacity (1)			344,60	384,60	429,60	480,50	534,40	585,40	667,40	722,40	775,30	824,40
Total absorbed power (1)			103,17	116,55	131,38	144,73	161,94	178,48	199,22	217,59	234,94	246,83
EER (1)			3,34	3,30	3,27	3,32	3,30	3,28	3,35	3,32	3,30	3,34
Comfort Application	Seasonal Energy Efficiency Ratio (2) **SEER**		4,83	4,77	4,76	4,82	4,76	4,76	4,82	4,81	4,80	4,78
Comfort Application	Seasonal energy efficiency(3) **ηs,c**	%	190	188	187	190	187	187	190	189	189	188
Acoustic data												
Global sound power level - Standard unit(4)		dB(A)	98.0	98.0	98.0	98.0	98.0	99.0	99.0	99.0	100.0	100.0
Electrical data												
Maximum current		A	231.0	259.0	286.0	293.0	360.0	403.0	459.0	459.0	459.0	514.0
Starting current		A	253.0	294.0	338.0	344.0	405.0	485.0	513.0	513.0	513.0	644.0
Refrigeration circuit												
Number of circuits			2	2	2	2	2	2	2	2	2	2
Number of compressors			2	2	2	2	2	2	2	2	2	2
Total refrigerant load - R1234A		kg	53	53	58	74	73	73	93	97	101	108
Evaporator												
Nominal water flow rate (1)		m^3/h	59.3	66.2	74.0	82.7	92.0	100.8	114.9	124.4	133.5	141.9
Nominal pressure drop (1)		kPa	36	44	33	44	53	61	42	51	58	42
Water connections		DN	125	125	125	125	150	150	150	150	150	200

(1) EUROVENT certified data, in accordance with standard EN 14511.
Cooling mode: Evaporator water temperature = 12/7°C | Outdoor air temperature = 35°C
(2) Seasonal energy efficiency of low-temperature room air heating. In accordance with EU Regulation 2016/2281.
(3) Temperature at which cooling capacity is reached equal to that indicated in point (1).
(4) Sound power: in accordance with ISO 3744 and Eurovent 8/1.

Z(A) A(B) C(C) 1100(D) D(E) A(F) 1(G) HE(H)

(A) **Z** = eProcess
(B) **A** = Air cooled unit - **B**= Air cooled unit with an inverter compressor - **C**= Air cooled unit all inverter compressors - **W** = Water cooled unit - **X** = Water cooled unit with an inverter compressor
(C) **C** = Cooling-only units
(D) **1100** = Approximate power in kW
(E) **S** = Single circuit - **D** = Double circuit- **T** = Triple circuit
(F) **A** = Refrigerant R134A - **J**= Refrigerant R513A - **X**= Refrigerant R1234ze - **H** = Refrigerant 515B
(G) **1** = Revision number
(H) **A** = Standard version - **HE** = High-efficiency version- **SSL** = Super "Low noise" version

Air cooled version

Cooling only units

eProcess - ZAC - HE			0885D	0955D	1025D	1105D	1175D	1335D	1455D	1565D	1655T	1715T
Nominal thermal performances - Cooling mode												
Cooling capacity (1)			891,30	968,30	1034,30	1121,20	1181,20	1333,10	1450,20	1564,10	1655,10	1714,20
Total absorbed power (1)			270,09	287,33	312,48	335,69	362,33	407,68	454,61	494,97	497,03	522,62
EER (1)			3,30	3,37	3,31	3,34	3,26	3,27	3,19	3,16	3,33	3,28
Comfort Application	Seasonal Energy Efficiency Ratio (2) **SEER**		4,74	4,77	4,77	4,82	4,75	4,78	4,79	4,76	4,83	4,75
Comfort Application	Seasonal energy efficiency(3) **ηs,c**	%	187	188	188	190	187	188	189	187	190	187
Acoustic data												
Global sound power level - Standard unit(4)		dB(A)	101.0	101.0	101.0	102.0	102.0	102.0	103.0	104.0	104.0	104.0
Electrical data												
Maximum current		A	562.0	616.0	664.0	710.0	749.0	756.0	849.0	917.0	911.0	959.0
Starting current		A	684.0	812.0	839.0	910.0	932.0	939.0	1148.0	1257.0	1107.0	1155.0
Refrigeration circuit												
Number of circuits			2	2	2	2	2	2	2	2	3	3
Number of compressors			2	2	2	2	2	2	2	2	3	3
Total refrigerant load - R1234A		kg	110	123	123	140	140	152	209	213	224	231
Evaporator												
Nominal water flow rate (1)		m^3/h	153.4	166.7	178.0	193.0	203.3	229.5	249.6	269.2	284.8	295.0
Nominal pressure drop (1)		kPa	51	42	46	53	57	71	40	53	61	44
Water connections		DN	200	200	200	200	200	200	200	200	200	200

(1) EUROVENT certified data, in accordance with standard EN 14511.
Cooling mode: Evaporator water temperature = 12/7°C | Outdoor air temperature = 35°C
(2) Seasonal energy efficiency of low-temperature room air heating. In accordance with EU Regulation 2016/2281.
(3) Temperature at which cooling capacity is reached equal to that indicated in point (1).
(4) Sound power: in accordance with ISO 3744 and Eurovent 8/1.

Z(A) A(B) C(C) 1100(D) D(E) A(F) 1(G) SSL(H)

(A) **Z** = eProcess
(B) **A** = Air cooled unit - **B**= Air cooled unit with an inverter compressor - **C**= Air cooled unit all inverter compressors - **W** = Water cooled unit - **X** = Water cooled unit with an inverter compressor
(C) **C** = Cooling-only units
(D) **1100** = Approximate power in kW
(E) **S** = Single circuit - **D** = Double circuit- **T** = Triple circuit
(F) **A** = Refrigerant R134A - **J**= Refrigerant R513A - **X**= Refrigerant R1234ze - **H** = Refrigerant 515B
(G) **1** = Revision number
(H) **A** = Standard version - **HE** = High-efficiency version- **SSL** = Super "Low noise" version

Air cooled version

Cooling only units

eProcess - ZAC - SSL			0345D	0385D	0425D	0475D	0525D	0585D	0655D	0715D	0765D	0815D
Nominal thermal performances - Cooling mode												
Cooling capacity (1)			334,70	373,60	412,60	476,50	514,00	562,40	642,00	701,40	752,30	791,40
Total absorbed power (1)			102,98	117,48	133,10	149,84	165,27	186,23	206,43	233,80	254,16	256,12
EER (1)			3,25	3,18	3,10	3,18	3,11	3,02	3,11	3,00	2,96	3,09
Comfort Application	Seasonal Energy Efficiency Ratio (2) **SEER**		4,78	4,68	4,65	4,75	4,71	4,66	4,73	4,72	4,69	4,67
	Seasonal energy efficiency(3) **ηs,c**	%	188	184	183	187	185	183	186	186	185	184
Acoustic data												
Global sound power level - Standard unit(4)		dB(A)	89.0	89.0	89.0	89.0	89.0	90.0	90.0	90.0	91.0	92.0
Electrical data												
Maximum current		A	231.0	259.0	286.0	293.0	360.0	403.0	459.0	459.0	459.0	514.0
Starting current		A	253.0	294.0	338.0	344.0	405.0	485.0	513.0	513.0	513.0	644.0
Refrigeration circuit												
Number of circuits			2	2	2	2	2	2	2	2	2	2
Number of compressors			2	2	2	2	2	2	2	2	2	2
Total refrigerant load - R1234A		kg	53	53	58	74	73	73	93	97	101	108
Evaporator												
Nominal water flow rate (1)		m^3/h	57.6	64.0	71.0	82.0	88.4	96.8	110.0	120.7	130.0	136.2
Nominal pressure drop (1)		kPa	34	42	30	43	49	56	39	48	55	39
Water connections		DN	125	125	125	125	150	150	150	150	150	200

(1) EUROVENT certified data, in accordance with standard EN 14511.
Cooling mode: Evaporator water temperature = 12/7°C | Outdoor air temperature = 35°C
(2) Seasonal energy efficiency of low-temperature room air heating. In accordance with EU Regulation 2016/2281.
(3) Temperature at which cooling capacity is reached equal to that indicated in point (1).
(4) Sound power: in accordance with ISO 3744 and Eurovent 8/1.

Z(A) A(B) C(C) 1100(D) D(E) A(F) 1(G) SSL(H)

(A) **Z** = eProcess
(B) **A** = Air cooled unit - **B**= Air cooled unit with an inverter compressor - **C**= Air cooled unit all inverter compressors - **W** = Water cooled unit - **X** = Water cooled unit with an inverter compressor
(C) **C** = Cooling-only units
(D) **1100** = Approximate power in kW
(E) **S** = Single circuit - **D** = Double circuit- **T** = Triple circuit
(F) **A** = Refrigerant R134A - **J**= Refrigerant R513A - **X**= Refrigerant R1234ze - **H** = Refrigerant 515B
(G) **1** = Revision number
(H) **A** = Standard version - **HE** = High-efficiency version- **SSL** = Super "Low noise" version

Air cooled version

Cooling only units

eProcess - ZAC - SSL			0885D	0955D	1025D	1105D	1175D	1335D	1455D	1565D	1655T	1715T
Nominal thermal performances - Cooling mode												
Cooling capacity (1)			851,30	930,40	1003,30	1077,30	1128,20	1287,10	1407,30	1502,20	1605,10	1663,20
Total absorbed power (1)			283,77	301,10	331,12	350,91	381,15	431,91	469,10	514,45	517,77	541,76
EER (1)			3,00	3,09	3,03	3,07	2,96	2,98	3,00	2,92	3,10	3,07
Comfort Application	Seasonal Energy Efficiency Ratio (2) **SEER**		4,66	4,66	4,64	4,69	4,66	4,66	4,71	4,66	4,75	4,65
Comfort Application	Seasonal energy efficiency(3) **ηs,c**	%	183	183	183	185	183	183	185	183	187	183
Acoustic data												
Global sound power level - Standard unit(4)		dB(A)	93.0	93.0	93.0	93.0	94.0	94.0	95.0	96.0	97.0	97.0
Electrical data												
Maximum current		A	562.0	616.0	664.0	710.0	749.0	756.0	849.0	917.0	911.0	959.0
Starting current		A	684.0	812.0	839.0	910.0	932.0	939.0	1148.0	1257.0	1107.0	1155.0
Refrigeration circuit												
Number of circuits			2	2	2	2	2	2	2	2	3	3
Number of compressors			2	2	2	2	2	2	2	2	3	3
Total refrigerant load - R1234A		kg	110	123	123	140	140	152	209	213	224	231
Evaporator												
Nominal water flow rate (1)		m^3/h	146.5	160.1	172.7	185.4	194.2	222.0	242.2	258.5	276.2	286.2
Nominal pressure drop (1)		kPa	47	39	43	49	52	66	38	49	57	41
Water connections		DN	200	200	200	200	200	200	200	200	200	200

(1) EUROVENT certified data, in accordance with standard EN 14511.
Cooling mode: Evaporator water temperature = 12/7°C | Outdoor air temperature = 35°C
(2) Seasonal energy efficiency of low-temperature room air heating. In accordance with EU Regulation 2016/2281.
(3) Temperature at which cooling capacity is reached equal to that indicated in point (1).
(4) Sound power: in accordance with ISO 3744 and Eurovent 8/1.

$Z_{(A)}$ $B_{(B)}$ $C_{(C)}$ $1100_{(D)}$ $D_{(E)}$ $A_{(F)}$ $1_{(G)}$ $HE_{(H)}$

(A) **Z** = eProcess
(B) **A** = Air cooled unit - **B**= Air cooled unit with an inverter compressor - **C**= Air cooled unit all inverter compressors - **W** = Water cooled unit - **X** = Water cooled unit with an inverter compressor
(C) **C** = Cooling-only units
(D) **1100** = Approximate power in kW
(E) **S** = Single circuit - **D** = Double circuit- **T** = Triple circuit
(F) **A** = Refrigerant R134A - **J**= Refrigerant R513A - **X**= Refrigerant R1234ze - **H** = Refrigerant 515B
(G) **1** = Revision number
(H) **A** = Standard version - **HE** = High-efficiency version- **SSL** = Super "Low noise" version

Air cooled version

Cooling only units

eProcess Plus - ZBC - HE			0560D	0600D	0670D	0710D	0770D	0860D	0930D	0980D	1080D	1160D	1310D	1500D	1600D	1700T	1840T
Nominal thermal performances - Cooling mode																	
Cooling capacity (1)			569,40	610,50	680,40	722,40	776,40	873,30	945,30	991,30	1094,20	1178,20	1325,10	1510,10	1600,10	1699,20	1839,10
Total absorbed power (1)			176,83	186,70	209,35	223,65	236,71	268,71	283,87	300,39	335,64	375,22	408,98	482,46	493,86	522,83	583,84
EER (1)			3,22	3,27	3,25	3,23	3,28	3,25	3,33	3,30	3,26	3,14	3,24	3,13	3,24	3,25	3,15
Comfort Application	Seasonal Energy Efficiency Ratio (2) **SEER**		5,08	5,01	5,03	5,01	5,01	5,04	5,02	5,00	5,01	5,00	5,01	5,00	4,98	5,05	5,01
	Seasonal energy efficiency(3) **ηs,c**	%	200	197	198	197	197	199	198	197	197	197	197	197	196	199	197
Acoustic data																	
Global sound power level - Standard unit(4)		dB(A)	101.0	102.0	102.0	102.0	103.0	103.0	104.0	104.0	104.0	104.0	105.0	106.0	106.0	106.0	106.0
Electrical data																	
Maximum current		A	399.0	406.0	406.0	431.0	507.0	507.0	537.0	658.0	658.0	795.0	802.0	916.0	959.0	994.0	1092.0
Starting current		A	438.0	445.0	445.0	472.0	597.0	597.0	632.0	793.0	793.0	906.0	913.0	1107.0	1228.0	1129.0	1178.0
Refrigeration circuit																	
Number of circuits			2	2	2	2	2	2	2	2	2	2	2	2	2	3	3
Number of compressors			2	2	2	2	2	2	2	2	2	2	2	2	2	3	3
Total refrigerant load - R1234A		kg	78	93	100	100	107	114	128	133	138	140	160	217	218	231	234
Evaporator																	
Nominal water flow rate (1)		m^3/h	98.0	105.1	117.1	124.4	133.6	150.3	162.7	170.6	188.3	202.8	228.1	259.9	275.4	292.4	316.5
Nominal pressure drop (1)		kPa	61	36	46	50	42	53	42	45	55	60	76	53	60	44	56
Water connections		DN	150	150	150	150	200	200	200	200	200	200	200	200	200	200	200

(1) EUROVENT certified data, in accordance with standard EN 14511.
Cooling mode: Evaporator water temperature = 12/7°C | Outdoor air temperature = 35°C
(2) Seasonal energy efficiency of low-temperature room air heating. In accordance with EU Regulation 2016/2281.
(3) Temperature at which cooling capacity is reached equal to that indicated in point (1).
(4) Sound power: in accordance with ISO 3744 and Eurovent 8/1.

Z(A) B(B) C(C) 1100(D) D(E) A(F) 1(G) SSL(H)

(A) **Z** = eProcess
(B) **A** = Air cooled unit - **B**= Air cooled unit with an inverter compressor - **C**= Air cooled unit all inverter compressors - **W** = Water cooled unit - **X** = Water cooled unit with an inverter compressor
(C) **C** = Cooling-only units
(D) **1100** = Approximate power in kW
(E) **S** = Single circuit - **D** = Double circuit- **T** = Triple circuit
(F) **A** = Refrigerant R134A - **J**= Refrigerant R513A - **X**= Refrigerant R1234ze - **H** = Refrigerant 515B
(G) **1** = Revision number
(H) **A** = Standard version - **HE** = High-efficiency version- **SSL** = Super "Low noise" version

Air cooled version

Cooling only units

eProcess Plus - ZBC - SSL			0560D	0600D	0670D	0710D	0770D	0860D	0930D	0980D	1080D	1160D	1310D	1500D	1600D	1700T	1840T
Nominal thermal performances - Cooling mode																	
Cooling capacity (1)			550,40	586,50	660,40	697,40	749,00	843,30	912,40	957,30	1056,30	1131,20	1272,10	1459,20	1552,10	1648,20	1784,10
Total absorbed power (1)			183,47	189,81	220,87	237,21	247,19	285,86	301,12	314,90	354,46	386,08	431,22	492,97	513,94	542,17	604,78
EER (1)			3,00	3,09	2,99	2,94	3,03	2,95	3,03	3,04	2,98	2,93	2,95	2,96	3,02	3,04	2,95
Comfort Application	Seasonal Energy Efficiency Ratio (2) **SEER**		4,98	4,91	4,91	4,91	4,91	4,93	4,90	4,90	4,93	4,88	4,91	4,90	4,87	4,96	4,91
	Seasonal energy efficiency(3) **ηs,c**	%	196	193	193	193	193	194	193	193	194	192	193	193	192	195	193
Acoustic data																	
Global sound power level - Standard unit(4)		dB(A)	93.0	93.0	93.0	93.0	94.0	95.0	95.0	95.0	96.0	96.0	97.0	98.0	99.0	99.0	99.0
Electrical data																	
Maximum current		A	399.0	406.0	406.0	431.0	507.0	507.0	537.0	658.0	658.0	795.0	802.0	916.0	959.0	994.0	1092.0
Starting current		A	438.0	445.0	445.0	472.0	597.0	597.0	632.0	793.0	793.0	906.0	913.0	1107.0	1228.0	1129.0	1178.0
Refrigeration circuit																	
Number of circuits			2	2	2	2	2	2	2	2	2	2	2	2	2	3	3
Number of compressors			2	2	2	2	2	2	2	2	2	2	2	2	2	3	3
Total refrigerant load - R1234A		kg	78	93	100	100	107	114	128	133	138	140	160	217	218	231	234
Evaporator																	
Nominal water flow rate (1)		m^3/h	94.8	101.0	113.7	120.1	129.0	145.2	157.0	164.8	181.8	194.7	219.0	251.1	267.1	283.6	307.0
Nominal pressure drop (1)		kPa	57	33	43	47	39	49	39	42	51	55	70	49	56	41	53
Water connections		DN	150	150	150	150	200	200	200	200	200	200	200	200	200	200	200

(1) EUROVENT certified data, in accordance with standard EN 14511.
Cooling mode: Evaporator water temperature = 12/7°C | Outdoor air temperature = 35°C
(2) Seasonal energy efficiency of low-temperature room air heating. In accordance with EU Regulation 2016/2281.
(3) Temperature at which cooling capacity is reached equal to that indicated in point (1).
(4) Sound power: in accordance with ISO 3744 and Eurovent 8/1.

$Z_{(A)}$ $C_{(B)}$ $C_{(C)}$ $1100_{(D)}$ $D_{(E)}$ $A_{(F)}$ $1_{(G)}$ $HE_{(H)}$

(A) **Z** = eProcess
(B) **A** = Air cooled unit - **B**= Air cooled unit with an inverter compressor - **C**= Air cooled unit all inverter compressors - **W** = Water cooled unit - **X** = Water cooled unit with an inverter compressor
(C) **C** = Cooling-only units
(D) **1100** = Approximate power in kW
(E) **S** = Single circuit - **D** = Double circuit- **T** = Triple circuit
(F) **A** = Refrigerant R134A - **J**= Refrigerant R513A - **X**= Refrigerant R1234ze - **H** = Refrigerant 515B
(G) **1** = Revision number
(H) **A** = Standard version - **HE** = High-efficiency version- **SSL** = Super "Low noise" version

Air cooled version

Cooling only units

eProcess Premiere - ZCC - HE			0565D	0615D	0685D	0775D	0845D	0945D	1005D	1195D	1365D	1495D	1615D	1715T	1865T
Nominal thermal performances - Cooling mode															
Cooling capacity (1)			570,40	619,50	689,40	782,40	856,30	955,00	1015,30	1195,20	1364,00	1504,10	1616,10	1715,20	1864,10
Total absorbed power (1)			177,69	192,99	215,44	242,23	266,76	295,67	322,32	384,31	430,28	480,54	517,98	546,24	617,25
EER (1)			3,21	3,21	3,20	3,23	3,21	3,23	3,15	3,11	3,17	3,13	3,12	3,14	3,02
Comfort Application	Seasonal Energy Efficiency Ratio (2) **SEER**		5,33	5,27	5,32	5,30	5,28	5,28	5,31	5,23	5,32	5,24	5,18	5,24	5,17
Comfort Application	Seasonal energy efficiency(3) **ηs,c**	%	210	208	210	209	208	208	209	206	210	207	204	207	204
Acoustic data															
Global sound power level - Standard unit(4)		dB(A)	102.0	103.0	103.0	104.0	104.0	105.0	105.0	105.0	106.0	106.0	107.0	108.0	108.0
Electrical data															
Maximum current		A	396.0	402.0	402.0	500.0	500.0	645.0	645.0	743.0	848.0	919.0	992.0	1164.0	1164.0
Starting current		A	305.0	312.0	312.0	387.0	387.0	499.0	499.0	597.0	653.0	724.0	331.0	627.0	627.0
Refrigeration circuit															
Number of circuits			2	2	2	2	2	2	2	2	2	2	2	3	3
Number of compressors			2	2	2	2	2	2	2	2	2	2	2	3	3
Total refrigerant load - R1234A		kg	78	93	100	107	114	133	139	180	196	217	218	230	236
Evaporator															
Nominal water flow rate (1)		m^3/h	98.2	106.6	118.7	134.7	147.4	164.4	174.8	205.7	234.8	258.9	278.1	295.2	320.8
Nominal pressure drop (1)		kPa	62	38	47	43	51	43	50	54	39	53	64	45	58
Water connections		DN	150	150	150	200	200	200	200	200	200	200	200	200	200

(1) EUROVENT certified data, in accordance with standard EN 14511.
Cooling mode: Evaporator water temperature = 12/7°C | Outdoor air temperature = 35°C
(2) Seasonal energy efficiency of low-temperature room air heating. In accordance with EU Regulation 2016/2281.
(3) Temperature at which cooling capacity is reached equal to that indicated in point (1).
(4) Sound power: in accordance with ISO 3744 and Eurovent 8/1.

Z(A) C(B) C(C) 1100(D) D(E) A(F) 1(G) SSL(H)

(A) **Z** = eProcess
(B) **A** = Air cooled unit - **B**= Air cooled unit with an inverter compressor - **C**= Air cooled unit all inverter compressors - **W** = Water cooled unit - **X** = Water cooled unit with an inverter compressor
(C) **C** = Cooling-only units
(D) **1100** = Approximate power in kW
(E) **S** = Single circuit - **D** = Double circuit- **T** = Triple circuit
(F) **A** = Refrigerant R134A - **J**= Refrigerant R513A - **X**= Refrigerant R1234ze - **H** = Refrigerant 515B
(G) **1** = Revision number
(H) **A** = Standard version - **HE** = High-efficiency version- **SSL** = Super "Low noise" version

Air cooled version

Cooling only units

eProcess Premiere - ZCC - SSL			0565D	0615D	0685D	0775D	0845D	0945D	1005D	1195D	1365D	1495D	1615D	1715T	1865T
Nominal thermal performances - Cooling mode															
Cooling capacity (1)			552,40	604,50	673,40	759,40	833,30	927,40	989,30	1158,20	1321,30	1458,20	1567,10	1664,20	1808,10
Total absorbed power (1)			184,13	195,63	225,97	251,46	283,44	307,09	334,22	403,55	447,90	494,31	536,68	567,99	641,17
EER (1)			3,00	3,09	2,98	3,02	2,94	3,02	2,96	2,87	2,95	2,95	2,92	2,93	2,82
Comfort Application	Seasonal Energy Efficiency Ratio (2) **SEER**		5,23	5,18	5,21	5,23	5,17	5,19	5,20	5,14	5,23	5,15	5,11	5,17	5,08
Comfort Application	Seasonal energy efficiency(3) **ηs,c**	%	206	204	205	206	204	205	205	203	206	203	201	204	200
Acoustic data															
Global sound power level - Standard unit(4)		dB(A)	94.00	94.00	94.00	95.00	96.00	96.00	97.0	97.0	98.0	98.0	100.0	101.0	101.0
Electrical data															
Maximum current		A	396.0	402.0	402.0	500.0	500.0	645.0	645.0	743.0	848.0	919.0	992.0	1164.0	1164.0
Starting current		A	305.0	312.0	312.0	387.0	387.0	499.0	499.0	597.0	653.0	724.0	331.0	627.0	627.0
Refrigeration circuit															
Number of circuits			2	2	2	2	2	2	2	2	2	2	2	3	3
Number of compressors			2	2	2	2	2	2	2	2	2	2	2	3	3
Total refrigerant load - R1234A		kg	78	93	100	107	114	133	139	180	196	217	218	230	236
Evaporator															
Nominal water flow rate (1)		m^3/h	95.1	104.1	115.9	130.7	143.4	159.6	170.3	199.4	227.4	251.0	269.7	286.4	311.2
Nominal pressure drop (1)		kPa	58	36	45	41	48	41	47	51	37	50	60	42	55
Water connections		DN	150	150	150	200	200	200	200	200	200	200	200	200	200

(1) EUROVENT certified data, in accordance with standard EN 14511.
Cooling mode: Evaporator water temperature = 12/7°C | Outdoor air temperature = 35°C
(2) Seasonal energy efficiency of low-temperature room air heating. In accordance with EU Regulation 2016/2281.
(3) Temperature at which cooling capacity is reached equal to that indicated in point (1).
(4) Sound power: in accordance with ISO 3744 and Eurovent 8/1.

Air cooled version

Cooling only units

eProcess - ZAC		0335D	0365D	0405D	0465D	0515D	0565D	0645D	0705D	0755D	0805D	1550T
A	mm	3800	3800	3800	4900	4900	8260	9360	9360	9360	10530	12730
B		2260	2260	2260	2260	2260	2260	2260	2260	2260	2260	2260
C		2480	2480	2480	2480	2480	2480	2480	2480	2480	2480	2480
Weight of standard units												
Transport weight	kg	3000	3090	3810	4210	4340	6820	7450	7690	9360	9900	11090

eProcess - ZAC		0935D	0995D	1075D	1115D	1275D	1405D	1505D	1605T	1705T	1805T	1955T
A	mm	8260	8260	9360	9360	10460	11560	11560	11630	11630	12730	12730
B		2260	2260	2260	2260	2260	2260	2260	2260	2260	2260	2260
C		2480	2480	2480	2480	2480	2480	2480	2480	2480	2480	2480
Weight of standard units												
Transport weight	kg	6021	6081	6516	6536	6916	8247	8588	9813	9910	10345	10622

Air cooled version

Cooling only units

eProcess - ZAC - HE/SSL		0345D	0385D	0425D	0475D	0525D	0585D	0655D	0715D	0765D	0815D
A	mm	4840	4840	4840	6000	6000	6000	7160	7160	7160	8260
B		2260	2260	2260	2260	2260	2260	2260	2260	2260	2260
C		2480	2480	2480	2480	2480	2480	2480	2480	2480	2480
Weight of standard units											
Transport weight HE version	kg	2991	2996	3030	3395	4094	4124	4647	4684	4704	5516
Transport weight SSL version	kg	5946	6416	6481	6848	6868	7273	8968	9304	10128	10220

eProcess - ZAC - HE/SSL		0345D	0385D	0425D	0475D	0525D	0585D	0655D	0715D	0765D	0815D
A	mm	8260	9360	9360	10460	10460	11560	12730	12730	12730	12730
B		2260	2260	2260	2260	2260	2260	2260	2260	2260	2260
C		2480	2480	2480	2480	2480	2480	2480	2480	2480	2480
Weight of standard units											
Transport weight HE version	kg	5946	6416	6481	6848	6868	7273	8968	9304	10128	10220
Transport weight SSL version	kg	6346	6816	6881	7248	7268	7673	9388	9724	10668	10760

Air cooled version

Cooling only units

eProcess - ZBC - HE/SSL		0560D	0600D	0670D	0710D	0770D	0860D	0930D	0980D	1080D	1160D	1310D	1500D	1600D	1700T	1840T
A	mm	6090	7250	7250	7250	8350	8350	9450	10550	10550	10550	11650	12810	11650	12730	12730
B		2260	2260	2260	2260	2260	2260	2260	2260	2260	2260	2260	2260	2260	2260	2260
C		2480	2480	2480	2480	2480	2480	2480	2480	2480	2480	2480	2480	2480	2480	2480
Weight of standard units																
Transport weight HE version	kg	4314	4727	4797	4807	5641	5741	6146	6416	6526	6868	7248	9134	8386	9840	10277
Transport weight SSL version	kg	4694	5127	5197	5207	6041	6141	6546	6816	6926	7268	7648	9574	8826	10380	10817

Air cooled version

Cooling only units

eProcess - ZCC - HE/SSL		0565D	0615D	0685D	0775D	0845D	0945D	1005D	1195D	1365D	1495D	1615D	1715T	1865T
A	mm	6090	7250	7250	8350	8350	10550	10550	10550	11650	12810	11650	12730	12730
B		2260	2260	2260	2260	2260	2260	2260	2260	2260	2260	2260	2260	2260
C		2480	2480	2480	2480	2480	2480	2480	2480	2480	2480	2480	2480	2480
Weight of standard units														
Transport weight HE version	kg	4144	4607	4707	5021	5141	5766	5876	6977	7763	8734	8036	9640	9687
Transport weight SSL version	kg	4524	5007	5107	5421	5541	6166	10550	7397	8183	9174	8476	10180	10227

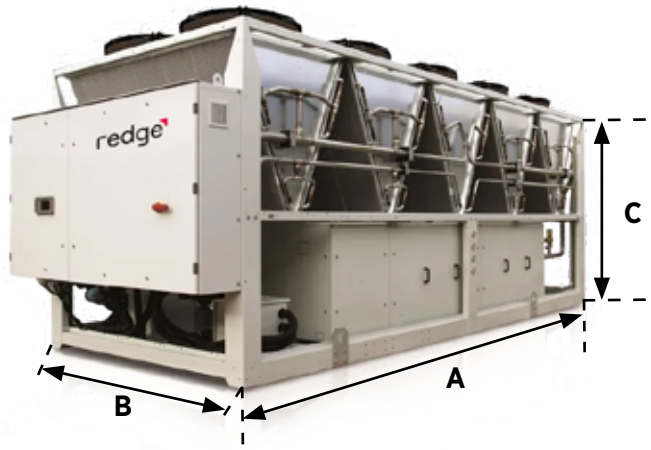

$Z_{(A)}$ $A_{(B)}$ $C_{(C)}$ $1100_{(D)}$ $D_{(E)}$ $J_{(F)}$ $1_{(G)}$ $A_{(H)}$

(A) **Z** = eProcess
(B) **A** = Air cooled unit - **B**= Air cooled unit with an inverter compressor - **C**= Air cooled unit all inverter compressors - **W** = Water cooled unit - **X** = Water cooled unit with an inverter compressor
(C) **C** = Cooling-only units
(D) **1100** = Approximate power in kW
(E) **S** = Single circuit - **D** = Double circuit- **T** = Triple circuit
(F) **A** = Refrigerant R134A - **J**= Refrigerant R513A - **X**= Refrigerant R1234ze - **H** = Refrigerant 515B
(G) **1** = Revision number
(H) **A** = Standard version - **HE** = High-efficiency version- **SSL** = Super "Low noise" version

Air cooled version

Cooling only units

eProcess - ZAC			0335D	0365D	0405D	0465D	0515D	0565D	0645D	0705D	0755D	0805D	0865D
Nominal thermal performances - Cooling mode													
Cooling capacity (1)			333,60	370,60	406,50	465,00	520,40	565,40	650,40	708,40	758,40	799,40	865,30
Total absorbed power (1)			111,20	127,35	142,63	155,00	180,07	199,08	220,47	244,28	264,25	270,07	300,45
EER (1)			3,00	2,91	2,85	3,00	2,89	2,84	2,95	2,90	2,87	2,96	2,88
Comfort Application	Seasonal Energy Efficiency Ratio (2) **SEER**		4,62	4,59	4,57	4,64	4,58	4,55	4,62	4,59	4,57	4,58	4,57
	Seasonal energy efficiency(3) **ηs,c**	%	182	181	180	183	180	179	182	181	180	180	180
Acoustic data													
Global sound power level - Standard unit(4)		dB(A)	97	98	98	98	98	99	99	100	100	101	101
Electrical data													
Maximum current		A	232	261	290	297	365	407	462	462	462	520	571
Starting current		A	249	291	335	342	655	487	513	513	513	644	685
Refrigeration circuit													
Number of circuits			2	2	2	2	2	2	2	2	2	2	2
Number of compressors			2	2	2	2	2	2	2	2	2	2	2
Total refrigerant load - R513A		kg	39	39	43	60	58	58	75	77	80	93	95
Evaporator													
Nominal water flow rate (1)		m^3/h	57.4	63.8	70.0	80.0	89.6	97.4	112.0	121.9	130.5	137.6	149.0
Nominal pressure drop (1)		kPa	41	50	48	54	74	55	55	44	50	39	48
Water connections		DN	125	125	125	125	125	150	150	150	150	200	200

(1) EUROVENT certified data, in accordance with standard EN 14511.
Cooling mode: Evaporator water temperature = 12/7°C | Outdoor air temperature = 35°C
(2) Seasonal energy efficiency of low-temperature room air heating. In accordance with EU Regulation 2016/2281.
(3) Temperature at which cooling capacity is reached equal to that indicated in point (1).
(4) Sound power: in accordance with ISO 3744 and Eurovent 8/1.

Z(A) A(B) C(C) 1100(D) D(E) J(F) 1(G) A(H)

(A) **Z** = eProcess
(B) **A** = Air cooled unit - **B**= Air cooled unit with an inverter compressor - **C**= Air cooled unit all inverter compressors - **W** = Water cooled unit - **X** = Water cooled unit with an inverter compressor
(C) **C** = Cooling-only units
(D) **1100** = Approximate power in kW
(E) **S** = Single circuit - **D** = Double circuit- **T** = Triple circuit
(F) **A** = Refrigerant R134A - **J**= Refrigerant R513A - **X**= Refrigerant R1234ze - **H** = Refrigerant 515B
(G) **1** = Revision number
(H) **A** = Standard version - **HE** = High-efficiency version- **SSL** = Super "Low noise" version

Air cooled version

Cooling only units

eProcess - ZAC			0935D	0995D	1075D	1115D	1275D	1405D	1505D	1605T	1705T	1805T	1955T
Nominal thermal performances - Cooling mode													
Cooling capacity (1)			944,30	994,20	1081,30	1121,20	1287,00	1399,10	1503,20	1599,10	1694,20	1799,10	1946,10
Total absorbed power (1)			317,95	341,65	356,86	382,66	423,36	475,88	514,79	522,58	557,30	589,87	680,45
EER (1)			2,97	2,91	3,03	2,93	3,04	2,94	2,92	3,06	3,04	3,05	2,86
Comfort Application	Seasonal Energy Efficiency Ratio (2) **SEER**		4,60	4,58	4,59	4,59	4,62	4,56	4,58	4,63	4,59	4,61	4,57
Comfort Application	Seasonal energy efficiency(3) **ηs,c**	%	181	180	181	181	182	179	180	182	181	181	180
Acoustic data													
Global sound power level - Standard unit(4)		dB(A)	101	101	102	102	102	103	104	104	104	105	106
Electrical data													
Maximum current		A	625	672	718	758	765	844	920	926	973	1068	1184
Starting current		A	813	840	910	934	941	1119	1257	1114	1161	1260	1479
Refrigeration circuit													
Number of circuits			2	2	2	2	2	2	2	3	3	3	3
Number of compressors			2	2	2	2	2	2	2	3	3	3	3
Total refrigerant load - R513A		kg	104	104	116	116	128	182	185	197	202	213	235
Evaporator													
Nominal water flow rate (1)		m^3/h	162.5	171.1	186.1	193.0	221.5	240.8	258.7	275.2	291.5	309.6	334.9
Nominal pressure drop (1)		kPa	56	60	50	54	71	67	44	60	42	49	61
Water connections		DN	200	200	200	200	200	200	200	200	200	200	200

(1) EUROVENT certified data, in accordance with standard EN 14511.
Cooling mode: Evaporator water temperature = 12/7°C | Outdoor air temperature = 35°C
(2) Seasonal energy efficiency of low-temperature room air heating. In accordance with EU Regulation 2016/2281.
(3) Temperature at which cooling capacity is reached equal to that indicated in point (1).
(4) Sound power: in accordance with ISO 3744 and Eurovent 8/1.

$Z_{(A)}$ $A_{(B)}$ $C_{(C)}$ $1100_{(D)}$ $D_{(E)}$ $J_{(F)}$ $1_{(G)}$ $HE_{(H)}$

(A) **Z** = eProcess
(B) **A** = Air cooled unit - **B**= Air cooled unit with an inverter compressor - **C**= Air cooled unit all inverter compressors - **W** = Water cooled unit - **X** = Water cooled unit with an inverter compressor
(C) **C** = Cooling-only units
(D) **1100** = Approximate power in kW
(E) **S** = Single circuit - **D** = Double circuit- **T** = Triple circuit
(F) **A** = Refrigerant R134A - **J**= Refrigerant R513A - **X**= Refrigerant R1234ze - **H** = Refrigerant 515B
(G) **1** = Revision number
(H) **A** = Standard version - **HE** = High-efficiency version- **SSL** = Super "Low noise" version

Air cooled version

Cooling only units

eProcess - ZAC HE			0345D	0385D	0425D	0475D	0525D	0585D	0655D	0715D	0765D	0815D
Nominal thermal performances - Cooling mode												
Cooling capacity (1)			343,60	383,60	427,60	478,50	532,40	583,40	664,40	719,40	772,30	820,40
Total absorbed power (1)			106,05	119,50	134,04	147,69	166,38	182,88	203,18	222,72	239,84	251,66
EER (1)			3,24	3,21	3,19	3,24	3,20	3,19	3,27	3,23	3,22	3,26
Comfort Application	Seasonal Energy Efficiency Ratio (2) **SEER**		4,80	4,72	4,71	4,77	4,71	4,72	4,77	4,76	4,76	4,74
	Seasonal energy efficiency(3) **ηs,c**	%	189	186	185	188	185	186	188	187	187	187
Acoustic data												
Global sound power level - Standard unit(4)		dB(A)	98.0	98.0	98.0	98.0	98.0	99.0	99.0	99.0	100.0	100.0
Electrical data												
Maximum current		A	239.0	268.0	297.0	304.0	371.0	414.0	469.0	469.0	469.0	527.0
Starting current		A	256.0	298.0	342.0	349.0	661.0	494.0	520.0	520.0	520.0	650.0
Refrigeration circuit												
Number of circuits			2	2	2	2	2	2	2	2	2	2
Number of compressors			2	2	2	2	2	2	2	2	2	2
Total refrigerant load - R513A		kg	50	50	55	70	69	69	88	92	96	103
Evaporator												
Nominal water flow rate (1)		m^3/h	59.2	66.0	73.6	82.4	91.7	100.4	114.4	123.8	133.0	141.2
Nominal pressure drop (1)		kPa	36	44	33	44	53	61	42	51	58	42
Water connections		DN	125	125	125	125	150	150	150	150	150	200

(1) EUROVENT certified data, in accordance with standard EN 14511.
Cooling mode: Evaporator water temperature = 12/7°C | Outdoor air temperature = 35°C
(2) Seasonal energy efficiency of low-temperature room air heating. In accordance with EU Regulation 2016/2281.
(3) Temperature at which cooling capacity is reached equal to that indicated in point (1).
(4) Sound power: in accordance with ISO 3744 and Eurovent 8/1.

Z(A) A(B) C(C) 1100(D) D(E) J(F) 1(G) HE(H)

(A) **Z** = eProcess
(B) **A** = Air cooled unit - **B**= Air cooled unit with an inverter compressor - **C**= Air cooled unit all inverter compressors - **W** = Water cooled unit - **X** = Water cooled unit with an inverter compressor
(C) **C** = Cooling-only units
(D) **1100** = Approximate power in kW
(E) **S** = Single circuit - **D** = Double circuit- **T** = Triple circuit
(F) **A** = Refrigerant R134A - **J**= Refrigerant R513A - **X**= Refrigerant R1234ze - **H** = Refrigerant 515B
(G) **1** = Revision number
(H) **A** = Standard version - **HE** = High-efficiency version- **SSL** = Super "Low noise" version

Air cooled version

Cooling only units

eProcess - ZAC HE			0885D	0955D	1025D	1105D	1175D	1335D	1455D	1565D	1655T	1715T
Nominal thermal performances - Cooling mode												
Cooling capacity (1)			887,30	964,30	1029,30	1116,20	1176,20	1327,10	1443,20	1557,10	1649,10	1705,20
Total absorbed power (1)			276,42	293,10	319,66	343,45	371,04	417,33	462,56	505,55	508,98	534,55
EER (1)			3,21	3,29	3,22	3,25	3,17	3,18	3,12	3,08	3,24	3,19
Comfort Application	Seasonal Energy Efficiency Ratio (2) **SEER**		4,70	4,73	4,72	4,77	4,71	4,74	4,74	4,72	4,78	4,69
Comfort Application	Seasonal energy efficiency(3) **ηs,c**	%	185	186	186	188	185	187	187	186	188	185
Acoustic data												
Global sound power level - Standard unit(4)		dB(A)	101.0	101.0	101.0	102.0	102.0	102.0	103.0	104.0	104.0	104.0
Electrical data												
Maximum current		A	578.0	631.0	678.0	725.0	765.0	772.0	851.0	927.0	934.0	981.0
Starting current		A	692.0	819.0	846.0	917.0	941.0	948.0	1126.0	1264.0	1122.0	1169.0
Refrigeration circuit												
Number of circuits			2	2	2	2	2	2	2	2	3	3
Number of compressors			2	2	2	2	2	2	2	2	3	3
Total refrigerant load - R513A		kg	104	116	116	133	133	144	197	201	209	215
Evaporator												
Nominal water flow rate (1)		m^3/h	152.7	166.0	177.2	192.0	202.4	228.4	248.4	268.0	283.8	293.4
Nominal pressure drop (1)		kPa	51	42	46	53	57	70	40	53	61	44
Water connections		DN	200	200	200	200	200	200	200	200	200	200

(1) EUROVENT certified data, in accordance with standard EN 14511.
Cooling mode: Evaporator water temperature = 12/7°C | Outdoor air temperature = 35°C
(2) Seasonal energy efficiency of low-temperature room air heating. In accordance with EU Regulation 2016/2281.
(3) Temperature at which cooling capacity is reached equal to that indicated in point (1).
(4) Sound power: in accordance with ISO 3744 and Eurovent 8/1.

$Z_{(A)}$ $A_{(B)}$ $C_{(C)}$ $1100_{(D)}$ $D_{(E)}$ $J_{(F)}$ $1_{(G)}$ $SSL_{(H)}$

(A) **Z** = eProcess
(B) **A** = Air cooled unit - **B**= Air cooled unit with an inverter compressor - **C**= Air cooled unit all inverter compressors - **W** = Water cooled unit - **X** = Water cooled unit with an inverter compressor
(C) **C** = Cooling-only units
(D) **1100** = Approximate power in kW
(E) **S** = Single circuit - **D** = Double circuit- **T** = Triple circuit
(F) **A** = Refrigerant R134A - **J**= Refrigerant R513A - **X**= Refrigerant R1234ze - **H** = Refrigerant 515B
(G) **1** = Revision number
(H) **A** = Standard version - **HE** = High-efficiency version- **SSL** = Super "Low noise" version

Air cooled version

Cooling only units

eProcess - ZAC SSL			0345D	0385D	0425D	0475D	0525D	0585D	0655D	0715D	0765D	0815D
Nominal thermal performances - Cooling mode												
Cooling capacity (1)			333,70	372,60	410,60	474,50	511,50	560,40	638,50	698,40	749,30	788,40
Total absorbed power (1)			105,94	120,19	135,96	152,57	168,81	190,61	210,73	238,36	260,17	261,93
EER (1)			3,15	3,10	3,02	3,11	3,03	2,94	3,03	2,93	2,88	3,01
Comfort Application	Seasonal Energy Efficiency Ratio (2) **SEER**		4,73	4,63	4,61	4,72	4,68	4,61	4,69	4,67	4,66	4,63
	Seasonal energy efficiency(3) **ηs,c**	%	186	182	181	186	184	181	185	184	183	182
Acoustic data												
Global sound power level - Standard unit(4)		dB(A)	89	89	89	89	89	90	90	90	91	92
Electrical data												
Maximum current		A	239	268	297	304	371	414	469	469	469	527
Starting current		A	256	298	342	349	661	494	520	520	520	650
Refrigeration circuit												
Number of circuits			2	2	2	2	2	2	2	2	2	2
Number of compressors			2	2	2	2	2	2	2	2	2	2
Total refrigerant load - R513A		kg	50	50	55	70	69	69	88	92	96	103
Evaporator												
Nominal water flow rate (1)		m^3/h	57.4	64.2	70.7	81.7	88.1	96.5	109.9	120.2	129.0	135.7
Nominal pressure drop (1)		kPa	34	42	30	43	49	56	39	48	55	39
Water connections		DN	125	125	125	125	150	150	150	150	150	200

(1) EUROVENT certified data, in accordance with standard EN 14511.
Cooling mode: Evaporator water temperature = 12/7°C | Outdoor air temperature = 35°C
(2) Seasonal energy efficiency of low-temperature room air heating. In accordance with EU Regulation 2016/2281.
(3) Temperature at which cooling capacity is reached equal to that indicated in point (1).
(4) Sound power: in accordance with ISO 3744 and Eurovent 8/1.

Z(A) A(B) C(C) 1100(D) D(E) J(F) 1(G) SSL(H)

(A) **Z** = eProcess
(B) **A** = Air cooled unit - **B**= Air cooled unit with an inverter compressor - **C**= Air cooled unit all inverter compressors - **W** = Water cooled unit - **X** = Water cooled unit with an inverter compressor
(C) **C** = Cooling-only units
(D) **1100** = Approximate power in kW
(E) **S** = Single circuit - **D** = Double circuit- **T** = Triple circuit
(F) **A** = Refrigerant R134A - **J**= Refrigerant R513A - **X**= Refrigerant R1234ze - **H** = Refrigerant 515B
(G) **1** = Revision number
(H) **A** = Standard version - **HE** = High-efficiency version- **SSL** = Super "Low noise" version

Air cooled version

Cooling only units

eProcess - ZAC SSL			0885D	0955D	1025D	1105D	1175D	1335D	1455D	1565D	1655T	1715T
Nominal thermal performances - Cooling mode												
Cooling capacity (1)			847,30	926,40	998,30	1072,30	1123,20	1281,10	1400,30	1501,20	1596,10	1650,20
Total absorbed power (1)			290,17	306,75	338,41	357,43	388,65	440,24	479,55	524,90	528,51	553,76
EER (1)			2,92	3,02	2,95	3,00	2,89	2,91	2,92	2,86	3,02	2,98
Comfort Application	Seasonal Energy Efficiency Ratio (2) **SEER**		4,63	4,64	4,61	4,67	4,63	4,63	4,68	4,63	4,71	4,60
	Seasonal energy efficiency(3) **ηs,c**	%	182	183	181	184	182	182	184	182	185	181
Acoustic data												
Global sound power level - Standard unit(4)		dB(A)	93	93	93	93	94	94	95	96	97	97
Electrical data												
Maximum current		A	578.0	631.0	678.0	725.0	765.0	772.0	851.0	927.0	934.0	981.0
Starting current		A	692.0	819.0	846.0	917.0	941.0	948.0	1126.0	1264.0	1122.0	1169.0
Refrigeration circuit												
Number of circuits			2	2	2	2	2	2	2	2	3	3
Number of compressors			2	2	2	2	2	2	2	2	3	3
Total refrigerant load - R513A		kg	104	116	116	133	133	144	197	201	209	215
Evaporator												
Nominal water flow rate (1)		m^3/h	145.9	159.4	171.8	184.6	193.3	220.5	241.0	258.3	274.7	284.0
Nominal pressure drop (1)		kPa	47	39	43	49	52	65	38	49	57	41
Water connections		DN	200	200	200	200	200	200	200	200	200	200

(1) EUROVENT certified data, in accordance with standard EN 14511.
Cooling mode: Evaporator water temperature = 12/7°C | Outdoor air temperature = 35°C
(2) Seasonal energy efficiency of low-temperature room air heating. In accordance with EU Regulation 2016/2281.
(3) Temperature at which cooling capacity is reached equal to that indicated in point (1).
(4) Sound power: in accordance with ISO 3744 and Eurovent 8/1.

Z(A) B(B) C(C) 1100(D) D(E) J(F) 1(G) HE(H)

(A) **Z** = eProcess
(B) **A** = Air cooled unit - **B**= Air cooled unit with an inverter compressor - **C**= Air cooled unit all inverter compressors - **W** = Water cooled unit - **X** = Water cooled unit with an inverter compressor
(C) **C** = Cooling-only units
(D) **1100** = Approximate power in kW
(E) **S** = Single circuit - **D** = Double circuit- **T** = Triple circuit
(F) **A** = Refrigerant R134A - **J**= Refrigerant R513A - **X**= Refrigerant R1234ze - **H** = Refrigerant 515B
(G) **1** = Revision number
(H) **A** = Standard version - **HE** = High-efficiency version- **SSL** = Super "Low noise" version

Air cooled version

Cooling only units

eProcess Plus - ZBC - HE			0560D	0600D	0670D	0710D	0770D	0860D	0930D	0980D	1080D	1160D	1310D	1500D	1600D	1700T	1840T
Nominal thermal performances - Cooling mode																	
Cooling capacity (1)			567,40	607,50	677,40	719,40	773,40	869,30	941,30	987,30	1089,20	1173,20	1319,10	1503,10	1591,10	1691,20	1831,10
Total absorbed power (1)			180,70	191,04	214,37	228,38	241,69	274,23	289,63	306,61	342,52	383,40	417,44	492,82	506,72	535,19	600,36
EER (1)			3,14	3,18	3,16	3,15	3,20	3,17	3,25	3,22	3,18	3,06	3,16	3,05	3,14	3,16	3,05
Comfort Application	Seasonal Energy Efficiency Ratio (2) **SEER**		5,02	4,94	4,96	4,97	4,96	4,98	4,94	4,96	4,97	4,94	4,96	4,96	4,93	5,00	4,96
	Seasonal energy efficiency(3) **ηs,c**	%	198	195	195	196	195	196	195	195	196	195	195	195	194	197	195
Acoustic data																	
Global sound power level - Standard unit(4)		dB(A)	101.0	102.0	102.0	102.0	103.0	103.0	104.0	104.0	104.0	104.0	105.0	106.0	106.0	106.0	106.0
Electrical data																	
Maximum current		A	407.0	414.0	414.0	438.0	513.0	513.0	544.0	666.0	666.0	814.0	821.0	928.0	975.0	1009.0	1117.0
Starting current		A	440.0	446.0	446.0	473.0	596.0	596.0	632.0	794.0	794.0	912.0	919.0	1112.0	1234.0	1137.0	1191.0
Refrigeration circuit																	
Number of circuits			2	2	2	2	2	2	2	2	2	2	2	2	2	3	3
Number of compressors			2	2	2	2	2	2	2	2	2	2	2	2	2	3	3
Total refrigerant load - R1234A		kg	74	88	95	95	101	108	121	126	130	133	151	210	203	215	218
Evaporator																	
Nominal water flow rate (1)		m^3/h	97.7	104.6	116.6	123.8	133.1	149.6	162.0	169.9	187.5	201.9	227.0	258.7	273.8	291.0	315.1
Nominal pressure drop (1)		kPa	61	36	46	50	42	53	42	45	54	59	75	53	59	44	56
Water connections		DN	150	150	150	150	200	200	200	200	200	200	200	200	200	200	200

(1) EUROVENT certified data, in accordance with standard EN 14511.
Cooling mode: Evaporator water temperature = 12/7°C | Outdoor air temperature = 35°C
(2) Seasonal energy efficiency of low-temperature room air heating. In accordance with EU Regulation 2016/2281.
(3) Temperature at which cooling capacity is reached equal to that indicated in point (1).
(4) Sound power: in accordance with ISO 3744 and Eurovent 8/1.

Z(A) B(B) C(C) 1100(D) D(E) J(F) 1(G) SSL(H)

(A) **Z** = eProcess
(B) **A** = Air cooled unit - **B**= Air cooled unit with an inverter compressor - **C**= Air cooled unit all inverter compressors - **W** = Water cooled unit - **X** = Water cooled unit with an inverter compressor
(C) **C** = Cooling-only units
(D) **1100** = Approximate power in kW
(E) **S** = Single circuit - **D** = Double circuit- **T** = Triple circuit
(F) **A** = Refrigerant R134A - **J**= Refrigerant R513A - **X**= Refrigerant R1234ze - **H** = Refrigerant 515B
(G) **1** = Revision number
(H) **A** = Standard version - **HE** = High-efficiency version- **SSL** = Super "Low noise" version

Air cooled version

Cooling only units

eProcess Plus - ZBC - SSL			0560D	0600D	0670D	0710D	0770D	0860D	0930D	0980D	1080D	1160D	1310D	1500D	1600D	1700T	1840T
Nominal thermal performances - Cooling mode																	
Cooling capacity (1)			548,40	584,50	657,40	694,40	746,00	839,30	908,40	953,30	1051,30	1126,20	1266,10	1452,20	1537,10	1640,20	1772,10
Total absorbed power (1)			187,17	193,54	225,91	242,80	252,03	292,44	306,89	322,06	362,52	393,78	439,62	502,49	524,61	556,00	623,98
EER (1)			2,93	3,02	2,91	2,86	2,96	2,87	2,96	2,96	2,90	2,86	2,88	2,89	2,93	2,95	2,84
Comfort Application	Seasonal Energy Efficiency Ratio (2) **SEER**		4,92	4,87	4,87	4,86	4,87	4,90	4,86	4,87	4,87	4,85	4,88	4,87	4,82	4,92	4,88
	Seasonal energy efficiency(3) **ηs,c**	%	194	192	192	191	192	193	191	192	192	191	192	192	190	194	192
Acoustic data																	
Global sound power level - Standard unit(4)		dB(A)	93.0	93.0	93.0	93.0	94.0	95.0	95.0	95.0	96.0	96.0	97.0	98.0	99.0	99.0	99.0
Electrical data																	
Maximum current		A	407.0	414.0	414.0	438.0	513.0	513.0	544.0	666.0	666.0	814.0	821.0	928.0	975.0	1009.0	1117.0
Starting current		A	440.0	446.0	446.0	473.0	596.0	596.0	632.0	794.0	794.0	912.0	919.0	1112.0	1234.0	1137.0	1191.0
Refrigeration circuit																	
Number of circuits			2	2	2	2	2	2	2	2	2	2	2	2	2	3	3
Number of compressors			2	2	2	2	2	2	2	2	2	2	2	2	2	3	3
Total refrigerant load - R1234A		kg	74	88	95	95	101	108	121	126	130	133	151	210	203	215	218
Evaporator																	
Nominal water flow rate (1)		m^3/h	94.4	100.6	113.2	119.5	128.5	144.5	156.0	164.1	180.9	193.8	217.9	249.9	264.5	282.3	305.0
Nominal pressure drop (1)		kPa	57	33	43	47	39	49	39	42	51	55	69	49	55	41	52
Water connections		DN	150	150	150	150	200	200	200	200	200	200	200	200	200	200	200

(1) EUROVENT certified data, in accordance with standard EN 14511.
Cooling mode: Evaporator water temperature = 12/7°C | Outdoor air temperature = 35°C
(2) Seasonal energy efficiency of low-temperature room air heating. In accordance with EU Regulation 2016/2281.
(3) Temperature at which cooling capacity is reached equal to that indicated in point (1).
(4) Sound power: in accordance with ISO 3744 and Eurovent 8/1.

Z(A) B(B) C(C) 1100(D) D(E) J(F) 1(G) HE(H)

(A) **Z** = eProcess
(B) **A** = Air cooled unit - **B**= Air cooled unit with an inverter compressor - **C**= Air cooled unit all inverter compressors - **W** = Water cooled unit - **X** = Water cooled unit with an inverter compressor
(C) **C** = Cooling-only units
(D) **1100** = Approximate power in kW
(E) **S** = Single circuit - **D** = Double circuit- **T** = Triple circuit
(F) **A** = Refrigerant R134A - **J**= Refrigerant R513A - **X**= Refrigerant R1234ze - **H** = Refrigerant 515B
(G) **1** = Revision number
(H) **A** = Standard version - **HE** = High-efficiency version- **SSL** = Super "Low noise" version

Air cooled version

Cooling only units

eProcess Premiere - ZCC - HE			0565D	0615D	0685D	0775D	0845D	0945D	1005D	1195D	1365D	1495D	1615D	1715T	1865T
Nominal thermal performances - Cooling mode															
Cooling capacity (1)			568,40	616,50	686,40	779,40	852,30	951,00	1010,30	1190,20	1358,00	1497,10	1609,10	1703,20	1850,10
Total absorbed power (1)			181,60	196,96	220,71	247,43	273,17	301,90	329,09	392,81	438,06	490,85	532,81	560,26	629,29
EER (1)			3,13	3,13	3,11	3,15	3,12	3,15	3,07	3,03	3,10	3,05	3,02	3,04	2,94
Comfort Application	Seasonal Energy Efficiency Ratio (2) **SEER**		5,30	5,23	5,28	5,27	5,23	5,25	5,28	5,20	5,26	5,19	5,15	5,21	5,13
Comfort Application	Seasonal energy efficiency(3) **ηs,c**	%	209	206	208	208	206	207	208	205	207	205	203	205	202
Acoustic data															
Global sound power level - Standard unit(4)		dB(A)	102.0	103.0	103.0	104.0	104.0	105.0	105.0	105.0	106.0	106.0	107.0	108.0	108.0
Electrical data															
Maximum current		A	400.0	407.0	407.0	498.0	498.0	647.0	647.0	755.0	870.0	941.0	1014.0	1187.0	1187.0
Starting current		A	309.0	316.0	316.0	385.0	385.0	501.0	501.0	609.0	670.0	740.0	337.0	642.0	642.0
Refrigeration circuit															
Number of circuits			2	2	2	2	2	2	2	2	2	2	2	3	3
Number of compressors			2	2	2	2	2	2	2	2	2	2	2	3	3
Total refrigerant load - R1234A		kg	74	88	95	101	108	126	131	170	185	201	203	214	220
Evaporator															
Nominal water flow rate (1)		m^3/h	102.0	103.0	103.0	104.0	104.0	105.0	173.9	204.9	233.8	257.7	276.9	293.1	318.4
Nominal pressure drop (1)		kPa	102	103	103	104	104	105	50	54	39	53	63	44	57
Water connections		DN	150	150	150	200	200	200	200	200	200	200	200	200	200

(1) EUROVENT certified data, in accordance with standard EN 14511.
Cooling mode: Evaporator water temperature = 12/7°C | Outdoor air temperature = 35°C
(2) Seasonal energy efficiency of low-temperature room air heating. In accordance with EU Regulation 2016/2281.
(3) Temperature at which cooling capacity is reached equal to that indicated in point (1).
(4) Sound power: in accordance with ISO 3744 and Eurovent 8/1.

Z(A) B(B) C(C) 1100(D) D(E) J(F) 1(G) SSL(H)

(A) **Z** = eProcess
(B) **A** = Air cooled unit - **B**= Air cooled unit with an inverter compressor - **C**= Air cooled unit all inverter compressors - **W** = Water cooled unit - **X** = Water cooled unit with an inverter compressor
(C) **C** = Cooling-only units
(D) **1100** = Approximate power in kW
(E) **S** = Single circuit - **D** = Double circuit- **T** = Triple circuit
(F) **A** = Refrigerant R134A - **J**= Refrigerant R513A - **X**= Refrigerant R1234ze - **H** = Refrigerant 515B
(G) **1** = Revision number
(H) **A** = Standard version - **HE** = High-efficiency version- **SSL** = Super "Low noise" version

Air cooled version

Cooling only units

eProcess Plus - ZBC - SSL			0565D	0615D	0685D	0775D	0845D	0945D	1005D	1195D	1365D	1495D	1615D	1715T	1865T
Nominal thermal performances - Cooling mode															
Cooling capacity (1)			550,40	601,50	670,40	756,40	829,30	923,40	985,30	1153,20	1315,30	1451,20	1554,10	1648,20	1782,10
Total absorbed power (1)			188,49	199,83	231,17	256,41	289,97	314,08	340,93	411,86	456,70	503,89	549,15	580,35	655,18
EER (1)			2,92	3,01	2,90	2,95	2,86	2,94	2,89	2,80	2,88	2,88	2,83	2,84	2,72
Comfort Application	Seasonal Energy Efficiency Ratio (2) **SEER**		5,19	5,12	5,17	5,17	5,13	5,17	5,17	5,10	5,19	5,13	5,06	5,11	5,03
	Seasonal energy efficiency(3) **ηs,c**	%	205	202	204	204	202	204	204	201	205	202	199	201	198
Acoustic data															
Global sound power level - Standard unit(4)		dB(A)	94.00	94.00	94.00	95.00	96.00	96.00	97.0	97.0	98.0	98.0	100.0	101.0	101.0
Electrical data															
Maximum current		A	400.0	407.0	407.0	498.0	498.0	647.0	647.0	755.0	870.0	941.0	1014.0	1187.0	1187.0
Starting current		A	309.0	316.0	316.0	385.0	385.0	501.0	501.0	609.0	670.0	740.0	337.0	642.0	642.0
Refrigeration circuit															
Number of circuits			2	2	2	2	2	2	2	2	2	2	2	3	3
Number of compressors			2	2	2	2	2	2	2	2	2	2	2	3	3
Total refrigerant load - R1234A		kg	74	88	95	101	108	126	131	170	185	201	203	214	220
Evaporator															
Nominal water flow rate (1)		m^3/h	94.8	103.5	115.4	130.2	142.8	158.9	169.6	198.5	226.4	249.7	267.5	283.6	306.7
Nominal pressure drop (1)		kPa	58	36	45	41	48	41	47	51	37	50	59	42	53
Water connections		DN	150	150	150	200	200	200	200	200	200	200	200	200	200

(1) EUROVENT certified data, in accordance with standard EN 14511.
Cooling mode: Evaporator water temperature = 12/7°C | Outdoor air temperature = 35°C
(2) Seasonal energy efficiency of low-temperature room air heating. In accordance with EU Regulation 2016/2281.
(3) Temperature at which cooling capacity is reached equal to that indicated in point (1).
(4) Sound power: in accordance with ISO 3744 and Eurovent 8/1.

Z(A) W(B) C(C) 1100(D) D(E) J(F) 1(G) A(H)

(A) **Z** = eProcess
(B) **A** = Air cooled unit - **B**= Air cooled unit with an inverter compressor - **C**= Air cooled unit all inverter compressors - **W** = Water cooled unit - **X** = Water cooled unit with an inverter compressor
(C) **C** = Cooling-only units
(D) **1100** = Approximate power in kW
(E) **S** = Single circuit - **D** = Double circuit- **T** = Triple circuit
(F) **A** = Refrigerant R134A - **J**= Refrigerant R513A - **X**= Refrigerant R1234ze - **H** = Refrigerant 515B
(G) **1** = Revision number
(H) **A** = Standard version - **HE** = High-efficiency version- **SSL** = Super "Low noise" version

Water cooled version

Cooling only units

eProcess - ZWC			0200S	0230S	0290S	0320S	0380S	0430D	0490D	0540D	0620D	0690D
Nominal thermal performances - Cooling mode												
Cooling capacity (1)			201,70	229,70	289,70	315,60	374,50	433,60	487,50	543,50	618,40	691,40
Total absorbed power (1)			43,28	49,40	61,25	67,87	79,01	88,49	102,20	113,23	129,64	143,74
EER (1)			4,66	4,65	4,73	4,65	4,74	4,90	4,77	4,80	4,77	4,81
Comfort Application	Seasonal Energy Efficiency Ratio (2) **SEER**		5,82	5,82	5,62	5,73	5,82	6,58	6,46	6,43	6,39	6,39
Comfort Application	Seasonal energy efficiency(3) **ηs,c**	%	230	230	222	226	230	260	255	254	253	253
Acoustic data												
Global sound power level - Standard unit(4)		dB(A)	94	94	96	96	96	97	97	97	97	97
Electrical data												
Maximum current		A	98	112	133	151	173	196	224	245	284	323
Starting current		A	290	350	439	520	612	357	423	512	601	702
Refrigeration circuit												
Number of circuits			1	1	1	1	1	2	2	2	2	2
Number of compressors			1	1	1	1	1	2	2	2	2	2
Total refrigerant load - R513A		kg	44	45	47	47	43	88	88	86	82	106
Condensador												
Nominal water flow rate (1)			41.7	47.5	59.8	65.3	77.2	89.0	100.5	111.9	127.4	142.3
Nominal pressure drop (1)			30	31	33	38	37	18	22	23	25	27
Water connections		kg	3"	3"	4"	4"	4"	4"	4"	4"	4"	4"- 5"
Evaporator												
Nominal water flow rate (1)		m^3/h	34.7	39.6	49.9	54.4	64.5	74.6	83.9	93.6	106.5	119.0
Nominal pressure drop (1)		kPa	41	47	35	40	56	36	45	42	54	47
Water connections		DN	100	100	125	125	125	150	150	150	150	150

(1) EUROVENT certified data, in accordance with standard EN 14511.
Cooling mode: Evaporator water temperature = 12/7°C | Outdoor air temperature = 35°C
(2) Seasonal energy efficiency of low-temperature room air heating. In accordance with EU Regulation 2016/2281.
(3) Temperature at which cooling capacity is reached equal to that indicated in point (1).
(4) Sound power: in accordance with ISO 3744. The sound power level data for this range are not part of the Eurovent certification program.

Z(A) W(B) C(C) 1100(D) D(E) J(F) 1(G) A(H)

(A) **Z** = eProcess
(B) **A** = Air cooled unit - **B**= Air cooled unit with an inverter compressor - **C**= Air cooled unit all inverter compressors - **W** = Water cooled unit - **X** = Water cooled unit with an inverter compressor
(C) **C** = Cooling-only units
(D) **1100** = Approximate power in kW
(E) **S** = Single circuit - **D** = Double circuit- **T** = Triple circuit
(F) **A** = Refrigerant R134A - **J**= Refrigerant R513A - **X**= Refrigerant R1234ze - **H** = Refrigerant 515B
(G) **1** = Revision number
(H) **A** = Standard version - **HE** = High-efficiency version- **SSL** = Super "Low noise" version

Water cooled version

Cooling only units

eProcess - ZWC			0770D	0860D	0950D	1030D	1100D	1180D	1250D	1310D	1390D	1450D
Nominal thermal performances - Cooling mode												
Cooling capacity (1)			774,40	859,40	950,40	1025,40	1098,30	1173,20	1250,20	1310,30	1391,20	1455,20
Total absorbed power (1)			158,04	175,39	193,17	209,27	225,99	241,40	256,71	270,16	286,85	301,28
EER (1)			4,90	4,90	4,92	4,90	4,86	4,86	4,87	4,85	4,85	4,83
Comfort Application	Seasonal Energy Efficiency Ratio (2) **SEER**		6,54	6,45	6,39	6,38	6,38	6,41	6,41	6,43	6,39	6,38
Comfort Application	Seasonal energy efficiency(3) **ηs,c**	%	253	252	252	253	253	254	253	252	253	252
Acoustic data												
Global sound power level - Standard unit(4)		dB(A)	98	98	99	99	99	99	99	99	100	100
Electrical data												
Maximum current		A	345	375	431	458	483	508	547	586	618	650
Starting current		A	716	444	566	583	612	630	751	766	830	867
Refrigeration circuit												
Number of circuits			2	2	2	2	2	2	2	2	2	2
Number of compressors			2	2	2	2	2	2	2	2	2	2
Total refrigerant load - R513A		kg	129	133	135	130	154	158	158	162	196	220
Condensador												
Nominal water flow rate (1)			159.0	176.4	195.1	210.5	225.5	240.9	256.5	269.3	285.8	299.3
Nominal pressure drop (1)			18	24	22	21	38	39	39	39	40	30
Water connections		kg	5"	5"	5"	5"	5"	5"	5"	5"	5"	5"
Evaporator												
Nominal water flow rate (1)		m^3/h	133.3	147.9	163.6	176.5	189.0	201.9	215.2	225.5	239.4	250.4
Nominal pressure drop (1)		kPa	48	45	34	38	46	55	59	37	48	51
Water connections		DN	150	150	200	200	200	200	200	200	200	200

(1) EUROVENT certified data, in accordance with standard EN 14511.
Cooling mode: Evaporator water temperature = 12/7°C | Outdoor air temperature = 35°C
(2) Seasonal energy efficiency of low-temperature room air heating. In accordance with EU Regulation 2016/2281.
(3) Temperature at which cooling capacity is reached equal to that indicated in point (1).
(4) Sound power: in accordance with ISO 374. The sound power level data for this range are not part of the Eurovent certification program.

$Z_{(A)}$ $X_{(B)}$ $C_{(C)}$ $1100_{(D)}$ $D_{(E)}$ $J_{(F)}$ $1_{(G)}$ $A_{(H)}$

(A) **Z** = eProcess
(B) **A** = Air cooled unit - **B**= Air cooled unit with an inverter compressor - **C**= Air cooled unit all inverter compressors - **W** = Water cooled unit - **X** = Water cooled unit with an inverter compressor
(C) **C** = Cooling-only units
(D) **1100** = Approximate power in kW
(E) **S** = Single circuit - **D** = Double circuit- **T** = Triple circuit
(F) **A** = Refrigerant R134A - **J**= Refrigerant R513A - **X**= Refrigerant R1234ze - **H** = Refrigerant 515B
(G) **1** = Revision number
(H) **A** = Standard version - **HE** = High-efficiency version- **SSL** = Super "Low noise" version

Water cooled version

Cooling only units

eProcess - ZXC		0390S	0490S	0600S	0720D	0810D	0900D	1000D	1110D	1260D	1360D	1520D	1700D
Nominal thermal performances - Cooling mode													
Cooling capacity (1)		389,50	486,50	610,40	727,40	816,30	920,30	1001,30	1117,20	1260,20	1361,10	1524,20	1701,10
Total absorbed power (1)		75,19	94,28	119,45	132,25	150,89	167,33	183,72	210,00	235,11	252,06	273,64	306,50
EER (1)		5,18	5,16	5,11	5,50	5,41	5,50	5,45	5,32	5,36	5,40	5,57	5,55
Comfort Application	Seasonal Energy Efficiency Ratio (2) **SEER**	7,75	7,68	7,66	7,57	7,69	7,68	7,48	7,40	7,38	7,35	7,50	7,46
Comfort Application	Seasonal energy efficiency(3) **ηs,c** %	307	304	303	300	305	304	296	293	292	291	297	295
Acoustic data													
Global sound power level - Standard unit(4)	dB(A)	97	99	101	98	98	100	100	102	103	103	102	103
Electrical data													
Maximum current	A	193	222	289	326	365	394	424	491	543	582	667	732
Starting current	A	20	20	20	418	507	536	540	607	754	875	960	1179
Refrigeration circuit													
Number of circuits		1	1	1	2	2	2	2	2	2	2	2	2
Number of compressors		1	1	1	2	2	2	2	2	2	2	2	2
Total refrigerant load - R513A	kg	94	94	103	171	171	171	171	195	233	233	315	315
Condensador													
Nominal water flow rate (1)		67,1	83,8	105,1	125,2	140,5	158,4	172,0	192,3	216,9	234,3	262,3	292,7
Nominal pressure drop (1)		50	50	58	50	50	50	50	60	53	60	50	51
Water connections	kg	125	125	125	150	150	150	150	150	150	150	200	200
Evaporator													
Nominal water flow rate (1)	m^3/h	79,0	99,0	124,0	146,0	165,0	185,0	202,0	226,0	255,0	275,0	306,0	342,0
Nominal pressure drop (1)	kPa	16	16	21	40	40	40	44	40	42	48	42	50
Water connections	DN	125	125	125	150	150	150	150	150	150	150	200	200

(1) EUROVENT certified data, in accordance with standard EN 14511.
Cooling mode: Evaporator water temperature = 12/7°C | Outdoor air temperature = 35°C
(2) Seasonal energy efficiency of low-temperature room air heating. In accordance with EU Regulation 2016/2281.
(3) Temperature at which cooling capacity is reached equal to that indicated in point (1).
(4) Sound power: in accordance with ISO 3744. The sound power level data for this range are not part of the Eurovent certification program.

Air cooled version

Cooling only units

eProcess - ZAC		0335D	0365D	0405D	0465D	0515D	0565D	0645D	0705D	0755D	0805D	0865D
A	mm	3740	3740	3740	4850	4850	4850	6000	6000	6000	7160	7160
B		2260	2260	2260	2260	2260	2260	2260	2260	2260	2260	2260
C		2480	2480	2480	2480	2480	2480	2480	2480	2480	2480	2480
Weight of standard units												
Transport weight	kg	2659	2669	2692	3095	3670	3814	4162	4197	4227	5211	5631

eProcess - ZAC		0935D	0995D	1075D	1115D	1275D	1405D	1505D	1605T	1705T	1805T	1955T
A	mm	8260	8260	9360	9360	10460	11560	11560	11630	11630	12730	12730
B		2260	2260	2260	2260	2260	2260	2260	2260	2260	2260	2260
C		2480	2480	2480	2480	2480	2480	2480	2480	2480	2480	2480
Weight of standard units												
Transport weight	kg	6021	6081	6516	6536	6916	8247	8588	9813	9910	10345	10622

Air cooled version

Cooling only units

eProcess - ZAC - HE/SSL		0345D	0385D	0425D	0475D	0525D	0585D	0655D	0715D	0765D	0815D
A	mm	4840	4840	4840	6000	6000	6000	7160	7160	7160	8260
B		2260	2260	2260	2260	2260	2260	2260	2260	2260	2260
C		2480	2480	2480	2480	2480	2480	2480	2480	2480	2480
Weight of standard units											
Transport weight HE version	kg	2991	2996	3030	3395	4094	4124	4647	4684	4704	5516
Transport weight SSL version	kg	5946	6416	6481	6848	6868	7273	8968	9304	10128	10220

eProcess - ZAC - HE/SSL		0885D	0955D	1025D	1105D	1175D	1335D	1455D	1565D	1655T	1715T
A	mm	8260	9360	9360	10460	10460	11560	12730	12730	12730	12730
B		2260	2260	2260	2260	2260	2260	2260	2260	2260	2260
C		2480	2480	2480	2480	2480	2480	2480	2480	2480	2480
Weight of standard units											
Transport weight HE version	kg	5946	6416	6481	6848	6868	7273	8968	9304	10128	10220
Transport weight SSL version	kg	6346	6816	6881	7248	7268	7673	9388	9724	10668	10760

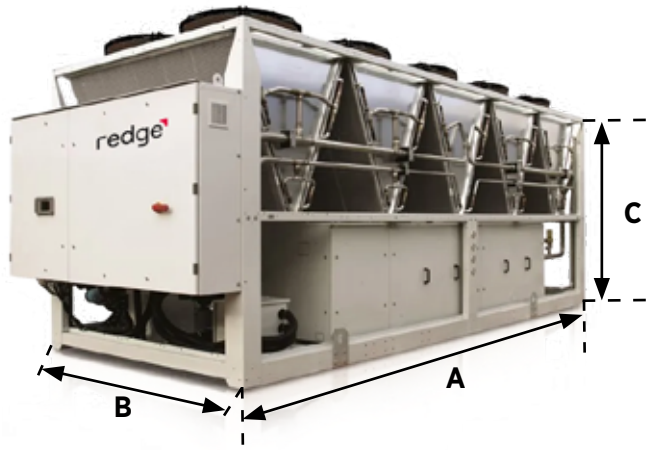

Air cooled version

Cooling only units

eProcess - ZBC - HE/ SSL		0560D	0600D	0670D	0710D	0770D	0860D	0930D	0980D	1080D	1160D	1310D	1500D	1600D	1700T	1840T
A	mm	6090	7250	7250	7250	8350	8350	9450	10550	10550	10550	11650	12810	11650	12730	12730
B		2260	2260	2260	2260	2260	2260	2260	2260	2260	2260	2260	2260	2260	2260	2260
C		2480	2480	2480	2480	2480	2480	2480	2480	2480	2480	2480	2480	2480	2480	2480
Weight of standard units																
Transport weight HE version	kg	4314	4727	4797	4807	5641	5741	6146	6416	6526	6868	7248	9134	8386	9840	10277
Transport weight SSL version	kg	4694	5127	5197	5207	6041	6141	6546	6816	6926	7268	7648	9574	8826	10380	10817

Air cooled version

Cooling only units

eProcess - ZCC - HE/ SSL		0565D	0615D	0685D	0775D	0845D	0945D	1005D	1195D	1365D	1495D	1615D	1715T	1865T
A	mm	6090	7250	7250	8350	8350	10550	10550	10550	11650	12810	11650	12730	12730
B		2260	2260	2260	2260	2260	2260	2260	2260	2260	2260	2260	2260	2260
C		2480	2480	2480	2480	2480	2480	2480	2480	2480	2480	2480	2480	2480
Weight of standard units														
Transport weight HE version	kg	4144	4607	4707	5021	5141	5766	5876	6977	7763	8734	8036	9640	9687
Transport weight SSL version	kg	4524	5007	5107	5421	5541	6166	10550	7397	8183	9174	8476	10180	10227

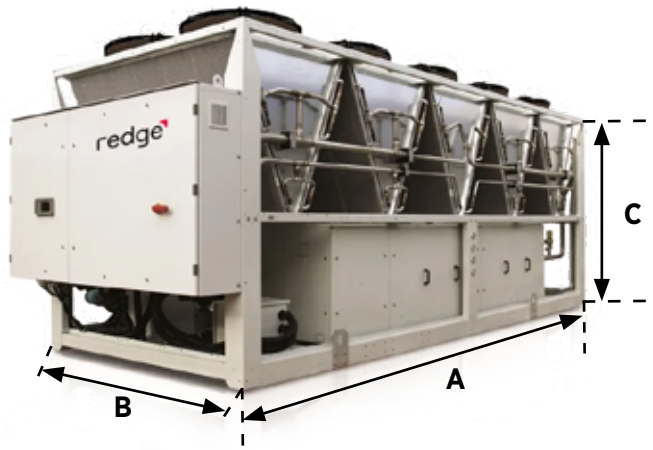

Water cooled version

Cooling only units

eProcess - ZWC		0200S	0230S	0290S	0320S	0380S	0430D	0490D	0540D	0620D	0690D
A	mm	2860	2860	3460	3460	3460	4060	4060	4060	4210	4240
B		1000	1000	1000	1000	1000	1320	1320	1320	1320	1320
C		1670	1670	1670	1670	1670	1850	1850	1850	1900	1900
Weight of standard units											
Transport weight	kg	1300	1320	1720	1730	1740	2400	2400	2750	3140	3260

eProcess - ZWC		0770D	0860D	0950D	1030D	1100D	1180D	1250D	1310D	1390D	1450D
A	mm	4670	4710	4850	4850	4850	4850	5150	5160	5130	5140
B		1320	1320	1320	1320	1320	1320	1320	1320	1320	1320
C		1980	1980	2130	2130	2230	2230	2230	2250	2350	2350
Weight of standard units											
Transport weight	kg	3510	3630	4640	4680	4830	4940	5030	5220	5590	5820

Water cooled version

Cooling only units

eProcess - ZXC		0390S	0490S	0600S	0720D	0810D	0900D	1000D	1110D	1260D	1360D	1520D	1700D
A	mm	3859	3859	3859	3990	3990	3990	4329	4407	4407	4407	4501	4586
B		1531	1531	1591	1676	1676	1676	1676	1814	1844	1844	1979	2024
C		1830	1830	1830	2040	2040	2040	2040	2040	2080	2080	2090	2090
Weight of standard units													
Transport weight	kg	2460	2530	2605	4700	4830	4915	5385	5600	6325	6455	7765	8115

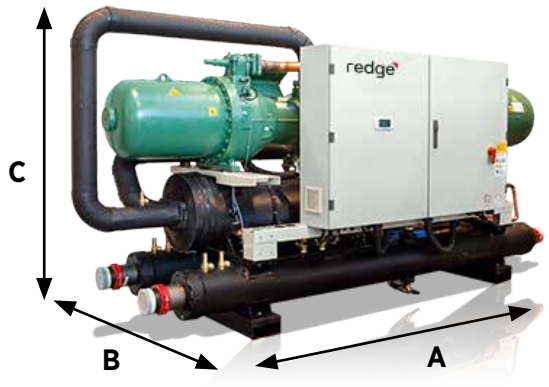

redge

NEXT LEVEL
HVAC SOLUTIONS

ROOMTOP PACKAGED UNITS



Flatair Advanced Inverter 121



Compactair Advanced Inverter 127



Compactair Essential 133



Aqualean 135

ROOMTOP PACKAGED UNITS — AIR COOLED



Flatair Advanced Inverter — R410A

22 - 33 kW
20 - 29 kW
3700 - 5600 m³/h

-



Compactair Advanced Inverter — R410A

22 - 82 kW
20 - 80 kW
5400 - 18700 m³/h

-



Compactair Essential — R410A

19 - 97 kW
20 - 105 kW

-

ROOMTOP PACKAGED UNITS — WATER COOLED



Aqualean — R410A

2,71 - 41 kW
3,37 - 50 kW
670 - 7500 m³/h

-

Air/Air
Water/Air

Cooling capacity
Heating capacity
Airflow rate

Cafés Restaurants
Convenience stores
Non food retail

Shopping malls
Industry
Office buildings

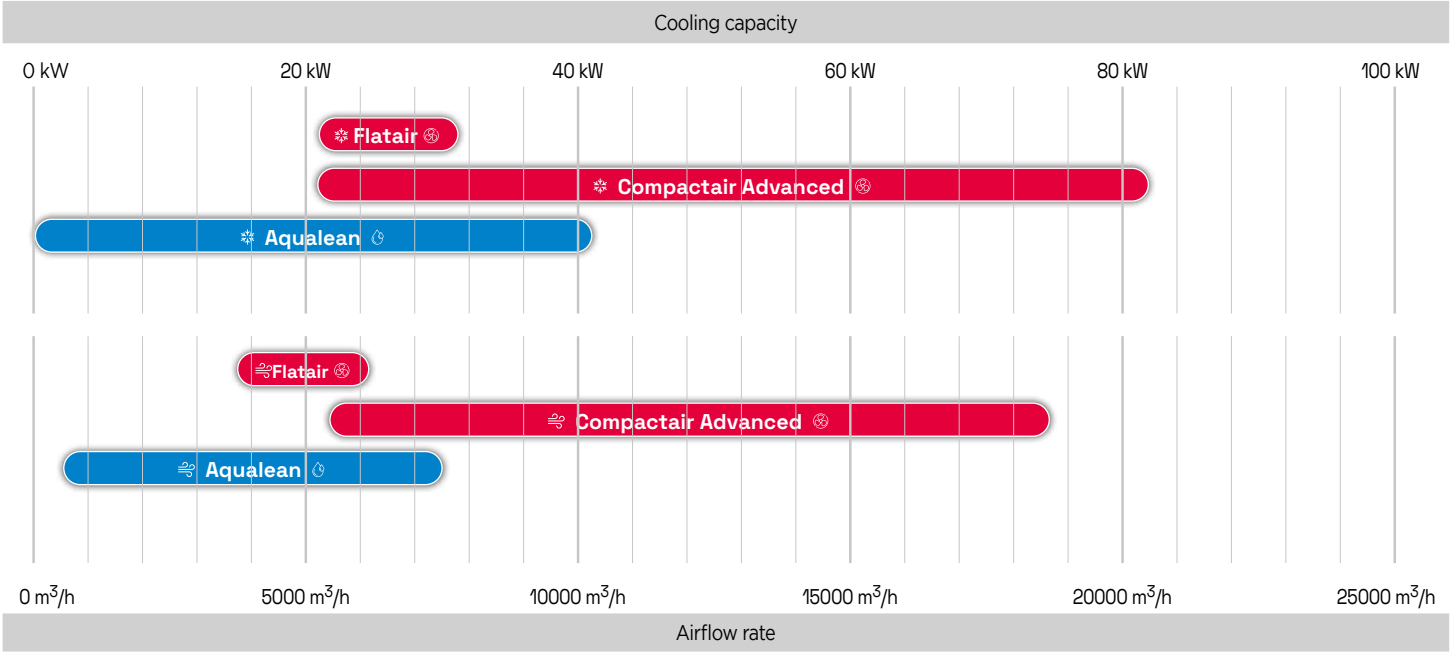

ROOMTOP PACKAGED UNITS | Available equipment

■ Standard equipment ● Option

Additional configurations/options are available on request, please contact your sales representative.

		AQUALEAN AWC/AWH	FLATAIR Advanced FAIH/FASH/FAMH	COMPACTAIR CAIH/CASH/CAMH	COMPACTAIR Essential
AUXILIARY HEATING	1 or 2 steps electric heater	●	●	●	●
	Modulating electric heater	-	●	●	●
REFRIGERANT	R410A	■	■	■	■
	Pressure transducers	-	■	■	■
COMPRESSORS	Scroll/MultiScroll	■	■	■	■
	Tandem	■	-	■	-
	Inverter compressor	-	■	■	-
	Compressor noise jacket	●	●	●	●
AIR FLOW CONFIGURATION	Horizontal supply	■	■	●	■
	Up supply	-	-	■	●
	Horizontal return	■	-	■	■
SUPPLY FANS	Direct drive fan	■	■	■	■
	Variable speed fan	-	■	■	●
CONDENSER FANS	Direct drive fan	-	■	■	-
	Variable speed fan	-	■	■	-
	Variable speed centrifugal fan	■	-	-	-
ECONOMISER	Motorised free-cooling/heating	-	●	●	●
CASING	Main disconnect switch	●	■	■	●
	Pre-coated galvanised steel (White)	-	■	■	■
INSULATION	A1 (M0) fire-proof	■	●	●	●
AIR FILTER	G2	■	■	-	-
	G4	-	-	■	■
	M5 + F7	-	●	●	●
ANTI-CORROSION PROTECTION	Blue fin coated coil protection for outdoor coil	-	●	●	●
	Blue fin coated coil protection for indoor and outdoor coil	-	●	●	●
EXHAUST	Exhaust fan	-	-	●	●
CONTROL AND COMMUNICATION	Dry & analogic contacts board	●	●	●	●
	ModBus RS485 interface	●	●	●	●
	BACnet RS485 interface	●	●	●	●
	ModBus & BACnet TCP/IP interface	●	●	●	●
	Service display	●	●	●	●
	Multi-units display	●	●	●	●
ADDITIONAL CONTROL AND SAFETY	Smoke detector	-	●	●	●
	Remote ambient temperature sensor	-	●	●	●
	CO_2 control	-	●	●	●
	Humidity control	-	●	●	●
	3 phase detector	●	●	●	●
HYDRAULIC OPTIONS	Water filter	●	-	-	-
	Flow switches (paddle one or through differential pressure measurement)	●	-	-	-
	3-way mixing valve	●	-	-	-

redge

NEXT LEVEL HVAC SOLUTIONS

redge

FLATAIR ADVANCED

Horizontal packaged air conditioners



AIR COOLED Inverter R410A

22 - **33** kW

20 - **29** kW

3700 - **5600** m³/h

- Horizontal design allowing complete indoor installation and **preserving the building's architecture**
- Packaged and split versions allowing **high adaptability** in any building configuration.
- **Optimised efficiency** at full and part load operation, thanks to variable speed compressor and EC fans on both sides.
- Variable speed technology stabilising the air flow and providing accurate supply temperature for **improved indoor air quality**.

THERMODYNAMIC SYSTEM

Inverter

- Inverter scroll compressor allowing capacity modulation.
- Variable refrigerant control with electronic expansion valve.
- Variable speed EC axial fans with optimised blade geometry to improve efficiency and reduce noise level.
- Large surface exchangers for highly efficient heat transfer.
- Dynamic defrost cycles.



AIR TREATMENT

- EC motor fans ensuring a precise temperature for better comfort and energy savings.
- Analogue filter detection to inform when the filters must be changed.
- IAQ kits for improved indoor air quality inside buildings:
  - G4 (standard)
  - M5 (ePM10) + F7 (ePM1) available as an option.

AUXILIARY HEATING DEVICES

- Electric heater made of welded blinded elements, with two safety switches to prevent overloading.
  Available in three different sizes:
  - Standard capacity
  - Medium capacity with one-stage regulation
  - High modulating capacity

PROTECTION OPTION

- Outdoor Kit is available as NSR

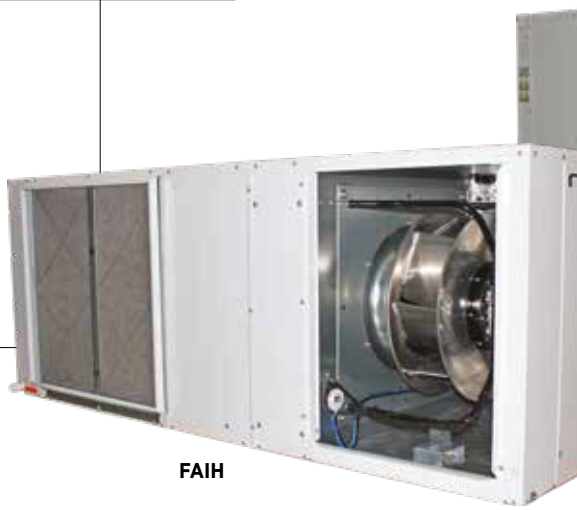

FAIH

Photos and illustrations are not contractual.

CONTROL

eClimatic electronic controller and intelligent control parameters optimising part-load efficiency.
Integrated communication solutions offering flexibility (master/slave, Modbus, BACnet).
Several display solutions for different access levels.

eCLIMATIC



DS
Service display



DM
Multi-unit display



DC
Comfort display





CASING & DESIGN

Horizontal design for false ceiling installation.
Casing built with pre-coated galvanized steel (White).
A1 (M0) fire-proof insulation.

ADAPTABILITY

Horizontal design to be installed in false ceilings (complete indoor installation).
Packaged (FAMH) and split versions (FASH+FAIH), adaptable to any building configuration.
Allows connection up to 30m between condensing unit and air treatment unit.
Two available configurations:
- Packaged unit (FAMH);
- Split version, with outdoor condensing unit (FASH) and indoor air treatment unit (FAIH).

AIRFLOW

Several horizontal airflow configurations on both packaged and split versions.
Economiser option allows energy savings with free-cooling operation.
eDrive: high efficiency ventilation with direct transmission and variable speed drives.
Fresh air and free cooling management.

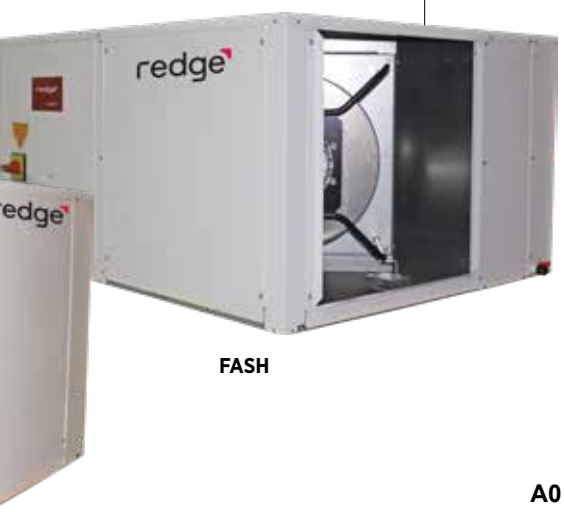

FASH

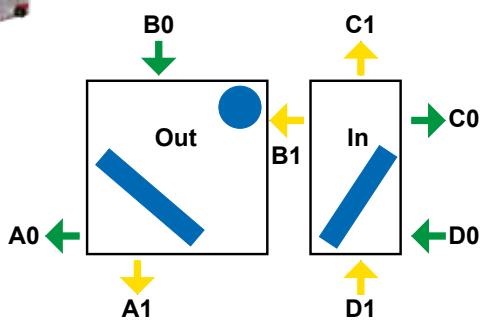

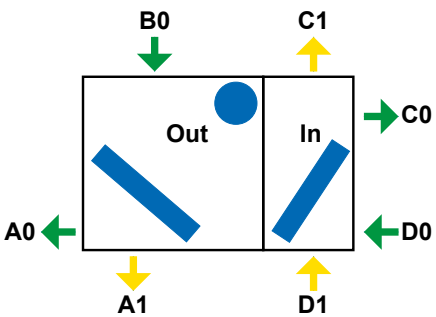

R410A

FA(A) M(B) H(C) 020(D) S(E) M(F) 2(G) M(H)

(A) **FA** = FLATAIR ADVANCED
(B) **M** = Packaged unit - **S** = Condensing unit (Outdoor unit / Split version) - **I** = Air treatment unit (Indoor unit / Split version)
(C) **H** = Heat pump unit
(D) Maximum cooling capacity in kW
(E) **S** = 1 circuit - **D** = 2 circuits
(F) **M** = R410A
(G) **2** = Revision number
(H) **M** = 400V/3/50Hz - **T** = 230V/1/50Hz

Air cooled version

Heat pump units

FLATAIR ADVANCED		FAMH : PACKAGED UNIT		FASH + FAIH : SPLIT VERSION	
		020	035	020	035
Nominal thermal performances - Cooling mode					
Cooling capacity (1)	kW	17,7	27,2	17,7	27,2
Total Power Input	kW	6,3	9,4	6,3	9,4
EER net (1)		2,81	2,91	2,81	2,91
Nominal thermal performances - Heating mode					
Heating capacity (2)	kW	16,1	22,6	16,1	22,6
Total Power Input	kW	4,5	7,1	4,5	7,1
COP net (2)		3,60	3,2	3,60	3,2
Seasonal efficiencies - Cooling mode					
Seasonal Energy Efficiency Ratio - **SEER** (3)		4,25	4,39	4,25	4,39
Seasonal energy efficiency - **ηs,c** (4)	%	167,1	172,5	167,1	172,5
Seasonal efficiencies - Heating mode					
Seasonal Coefficient of Performance - **SCOP** (5)		3,32	3,32	3,32	3,32
Seasonal energy efficiency - **ηs,h** (6)	%	129,8	129,7	129,8	129,7
Auxiliary heating					
Electric heater capacity - Standard / High	kW	4,5 / 15			
Ventilation data					
Minimum airflow rate	m^3/h	1800	2800	1800	2800
Nominal airflow rate		3700	5600	3700	5600
Maximum airflow rate		4500	6200	4500	6200
Acoustic data - Standard unit					
Outdoor sound power	dB(A)	83	89	83	89
Indoor blower outlet sound power		73	78	73	78
Electrical data					
Maximum power	kW	12,4	19,7	1,4 / 11,1	2,7 / 17
Maximum current	A	23,3	35,0	2,3 / 21,2	4,3 / 30,9
Starting current	A	23,3	35,0	2,3 / 21,2	4,3 / 30,9
Short circuit current	kA	10	10	10	10
Refrigeration circuit					
Number of circuits		1	1	1	1
Number of compressors		1	1	1	1
Refrigerant load	kg	6,6	8	6,6	8

(1) **Cooling mode :** According to EN14511 nominal conditions - Outdoor temperature 35°C DB - Indoor temperature 27°C DB / 19°C WB
(2) **Heating mode :** According to EN14511 nominal conditions - Outdoor temperature 7°C DB / 6°C WB - Indoor temperature 20°C DB
(3) SEER in accordance with standard EN14825.
(4) Space cooling energy efficiency following Ecodesign regulation EU 2016/2281
(5) SCOP in accordance with standard EN 14825 (average climate conditions).
(6) Space heating energy efficiency following Ecodesign regulation EU 2016/2281.

Air cooled version

FLATAIR ADVANCED		FAMH : PACKAGED UNIT		FASH : OUTDOOR UNIT		FAIH : INDOOR UNIT	
		020	035	020	035	020	035
A	mm	1980	2050	1205	1060	775	990
B		1500	1950	1500	1950	1500	1950
C		670	770	670	770	670	770
Weight of standard units							
Basic unit	kg	340	555	220	330	135	225

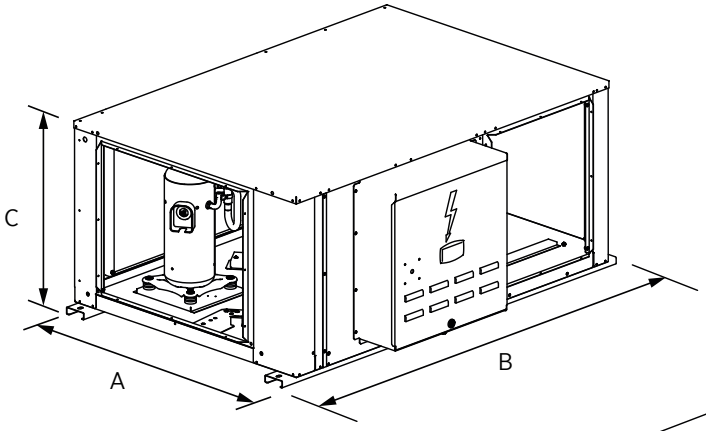

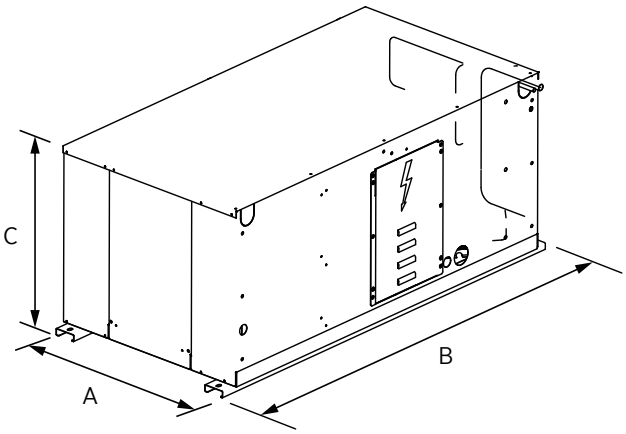

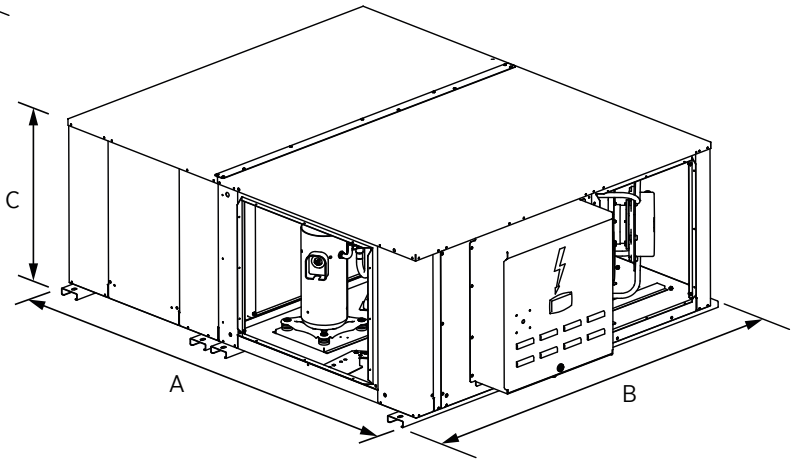

redge

NEXT LEVEL
HVAC SOLUTIONS

redge

COMPACTAIR ADVANCED

Vertical packaged air conditioners



AIR COOLED Inverter R410A

22 - **82** kW

20 - **80** kW

5400 - **18700** m³/h

- # Vertical design **offering a reduced footprint**.
- # Indoor unit **preserving the building's architecture**.
- # Packaged and split versions allowing **high adaptability** in any building configuration.
- # **Optimised efficiency** at full and part load operation, thanks to variable speed compressor and EC fans on both sides.
- # Variable speed technology stabilising the air flow and providing accurate supply temperature for **improved indoor air quality**.

AIR TREATMENT

EC motor fans ensuring a precise temperature for better comfort and energy savings.
Analogue filter detection to inform when the filters must be changed.
IAQ kits for improved indoor air quality inside buildings:
- G4 (standard)
- M5 (ePM10) + F7 (ePM1) available as an option.





THERMODYNAMIC SYSTEM

Inverter scroll compressor allowing capacity modulation.
Variable refrigerant control with electronic expansion valve.
Variable speed EC axial fans with optimised blade geometry to improve efficiency and reduce noise level.
Large surface exchangers for highly efficient heat transfer.
Dynamic defrost cycles.

AUXILIARY HEATING DEVICES

Electric heater made of welded blinded elements, with two safety switches to prevent overloading.
Available in three different sizes:
- Standard capacity
- Medium capacity with a one-stage regulation
- High modulating capacity

CAIH - INDOOR UNIT



Photos and illustrations are not contractual.

CASING & DESIGN

Vertical design for machine room installation.
Casing built with pre-coated galvanized steel (White).
A1 (MO) fire-proof insulation.
Blue fin coated coil protection for outdoor and indoor coil (option)

CAMH - PACKAGED UNIT



ADAPTABILITY

Packaged (CAMH) and split versions (CASH+CAIH), adaptable to any building configuration.
Allows connection up to 30m between condensing unit and air treatment unit.
Two configurations available:
- Packaged unit (CAMH);
- Split version, with outdoor condensing unit (CASH) and indoor air treatment unit (CAIH).

CONTROL

eClimatic electronic controller and intelligent control parameters optimising part-load efficiency.
Integrated communication solutions offering flexibility (master/slave, Modbus, BACnet.)
Several display solutions for different access levels.

eCLIMATIC



DS
Service display



DM
Multi-unit display



DC
Comfort display



CASH - OUTDOOR UNIT



AIRFLOW

Horizontal or vertical air discharges on both configurations.
Economiser option allows energy savings with free-cooling operation.
eDrive: high efficiency ventilation with direct transmission and variable speed drives.
Fresh air and free cooling management.

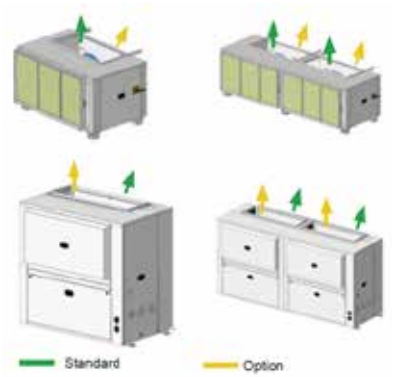

CA(A) M(B) H(C) 020(D) S(E) M(F) 2(G) M(H)

(A) **CA** = COMPACTAIR ADVANCED
(B) **M** = Packaged unit - **S** = Condensing unit (Outdoor unit / Split version) - **I** = Air treatment unit (Indoor unit / Split version)
(C) **H** = Heat pump unit
(D) Maximum cooling capacity in kW
(E) **S** = 1 circuit - **D** = 2 circuits
(F) **M** = R410A
(G) **2** = Revision number
(H) **M** = 400V/3/50Hz - **T** = 230V/1/50Hz

Air cooled version

Heat pump units

COMPACTAIR ADVANCED		CAMH : PACKAGED UNIT					
		020	035	045	060	075	085
Nominal thermal performances - Cooling mode							
Cooling capacity (1)	kW	17,6	26,3	38,3	53,1	64,5	79,6
Total Power Input	kW	5,5	8,7	13,2	18,1	22,7	27,7
EER net (1)		3,19	3,02	2,90	2,92	2,83	2,88
Nominal thermal performances - Heating mode							
Heating capacity (2)	kW	15,7	23,7	30,8	46,4	57,0	66,8
Total Power Input	kW	3,8	6,8	9,0	13,7	18,9	21,9
COP net (2)		4,09	3,5	3,41	3,39	3,02	3,05
Seasonal efficiencies - Cooling mode							
Seasonal Energy Efficiency Ratio - **SEER** (3)		3,78	4,38	4,59	3,86	3,99	3,98
Seasonal energy efficiency - **ηs,c** (4)	%	148,1	172,2	180,5	151,2	156,5	156,1
Seasonal efficiencies - Heating mode							
Seasonal Coefficient of Performance - **SCOP** (5)		3,33	3,38	3,30	3,41	3,36	3,35
Seasonal energy efficiency - **ηs,h** (6)	%	130,3	132,3	128,9	133,3	131,2	131,1
Auxiliary heating							
Electric heater capacity - Standard / High	kW	10 / 20	10 / 20	10 / 20	15 / 40	15 / 40	15 / 40
Ventilation data							
Minimum airflow rate	m^3/h	1800	2800	3700	6200	6700	7500
Nominal airflow rate	m^3/h	3700	5800	7500	12500	13500	15000
Maximum airflow rate	m^3/h	4500	6200	7500	12500	13500	15000
Acoustic data - Standard unit							
Outdoor sound power	dB(A)	84	88	95	90	95	98
Indoor blower outlet sound power	dB(A)	69	78	83	83	85	87
Electrical data							
Maximum power	kW	15,1	20,8	29,0	50,1	57,5	64,5
Maximum current	A	27,3	36,8	50,1	81,7	96,7	108,1
Starting current	A	27,3	36,8	50,1	124,6	183,4	194,8
Short circuit current	kA	10	10	10	10	10	10
Refrigeration circuit							
Number of circuits		1	1	1	2	2	2
Number of compressors		1	1	1	3	3	3
Refrigerant load	kg	6,7	6,7	9	12	14	18

(1) **Cooling mode :** According to EN14511 nominal conditions - Outdoor temperature 35°C DB - Indoor temperature 27°C DB / 19°C WB
(2) **Heating mode :** According to EN14511 nominal conditions - Outdoor temperature 7°C DB / 6°C WB - Indoor temperature 20°C DB
(3) SEER in accordance with standard EN14825.
(4) Space cooling energy efficiency following Ecodesign regulation EU 2016/2281
(5) SCOP in accordance with standard EN 14825 (average climate conditions).
(6) Space heating energy efficiency following Ecodesign regulation EU 2016/2281.

CA(A) M(B) H(C) 020(D) S(E) M(F) 2(G) M(H)

(A) **CA** = COMPACTAIR ADVANCED
(B) **M** = Packaged unit - **S** = Condensing unit (Outdoor unit / Split version) - **I** = Air treatment unit (Indoor unit / Split version)
(C) **H** = Heat pump unit
(D) Maximum cooling capacity in kW
(E) **S** = 1 circuit - **D** = 2 circuits
(F) **M** = R410A
(G) **2** = Revision number
(H) **M** = 400V/3/50Hz - **T** = 230V/1/50Hz

Air cooled version — Heat pump units

COMPACTAIR ADVANCED		CASH + CAIH : SPLIT VERSION					
		020	035	045	060	075	085
Nominal thermal performances - Cooling mode							
Cooling capacity (1)	kW	17,6	26,3	38,3	53,1	64,5	79,6
Total Power Input	kW	5,5	8,7	13,2	18,1	22,7	27,7
EER net (1)		3,19	3,02	2,90	2,92	2,83	2,88
Nominal thermal performances - Heating mode							
Heating capacity (2)	kW	15,7	23,7	30,8	46,4	57,0	66,8
Total Power Input	kW	3,8	6,8	9,0	13,7	18,9	21,9
COP net (2)		4,09	3,49	3,41	3,39	3,02	3,0
Seasonal efficiencies - Cooling mode							
Seasonal Energy Efficiency Ratio - **SEER** (3)		3,78	4,38	4,59	3,86	3,99	3,98
Seasonal energy efficiency - **ηs,c** (4)	%	148,1	172,2	180,5	151,2	156,5	156,1
Seasonal efficiencies - Heating mode							
Seasonal Coefficient of Performance - **SCOP** (5)		3,33	3,38	3,30	3,41	3,36	3,35
Seasonal energy efficiency - **ηs,h** (6)	%	130,3	132,3	128,9	133,3	131,2	131,1
Auxiliary heating							
Electric heater capacity - Standard / High	kW	10 / 20	10 / 20	10 / 20	15 / 40	15 / 40	15 / 40
Ventilation data							
Minimum airflow rate	m^3/h	1800	2800	3700	6200	6700	7500
Nominal airflow rate	m^3/h	3700	5800	7500	12500	13500	15000
Maximum airflow rate	m^3/h	4500	6200	7500	12500	13500	15000
Acoustic data - Standard unit							
Outdoor sound power	dB(A)	84	88	95	90	95	98
Indoor blower outlet sound power	dB(A)	69	78	83	83	85	87
Electrical data							
Maximum power	kW	2,7 / 12,4	2,7 / 18,2	3,9 / 25,2	5,4 / 44,8	7,7 / 49,9	7,7 / 56,9
Maximum current	A	4,3 / 23,2	4,3 / 32,7	6,1 / 44,2	8,4 / 73,5	12 / 84,9	12 / 96,3
Starting current	A	4,3 / 23,2	4,3 / 32,7	6,1 / 44,2	8,4 / 116,4	12 / 171,6	12 / 183
Short circuit current	kA	10	10	10	10	10	10
Refrigeration circuit							
Number of circuits		1	1	1	2	2	2
Number of compressors		1	1	1	3	3	3
Refrigerant load	kg	6,7	6,7	9	12	14	18

(1) **Cooling mode :** According to EN14511 nominal conditions - Outdoor temperature 35°C DB - Indoor temperature 27°C DB / 19°C WB
(2) **Heating mode :** According to EN14511 nominal conditions - Outdoor temperature 7°C DB / 6°C WB - Indoor temperature 20°C DB
(3) SEER in accordance with standard EN14825.
(4) Space cooling energy efficiency following Ecodesign regulation EU 2016/2281
(5) SCOP in accordance with standard EN 14825 (average climate conditions).
(6) Space heating energy efficiency following Ecodesign regulation EU 2016/2281.

Air cooled version — Heat pump units

COMPACTAIR ADVANCED		CAMH : PACKAGED UNIT					
		020	035	045	060	075	085
A	mm	1445	1445	1445	2813	2813	2813
B		895	895	895	895	895	895
C		2145	2145	2145	2145	2145	2145
Weight of standard units							
Basic unit	kg	460	485	488	995	1040	1060

Air cooled version — Heat pump units

COMPACTAIR ADVANCED		CASH : OUTDOOR UNIT					
		020	035	045	060	075	085
A	mm	1445	1445	1445	2813	2813	2813
B		895	895	895	895	895	895
C		1410	1410	1410	1410	1410	1410
Weight of standard units							
Basic unit	kg	288	286	306	622	642	662

Air cooled version — Heat pump units

COMPACTAIR ADVANCED		CAIH : INDOOR UNIT					
		020	035	045	060	075	085
A	mm	1445	1445	1445	2813	2813	2813
B		895	895	895	895	895	895
C		836	836	836	836	836	836
Weight of standard units							
Basic unit	kg	172	204	186	378	398	408

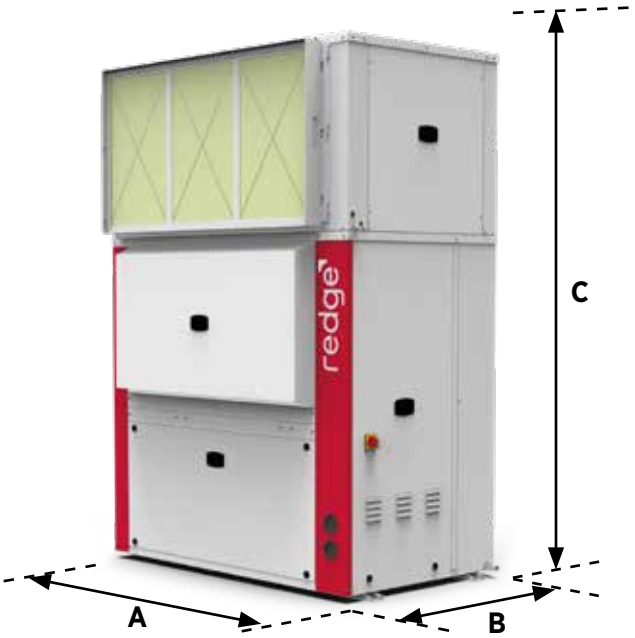

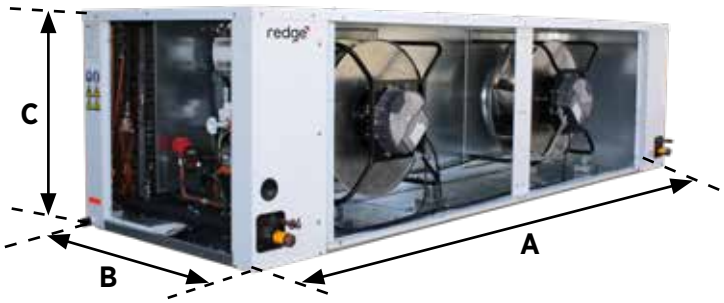

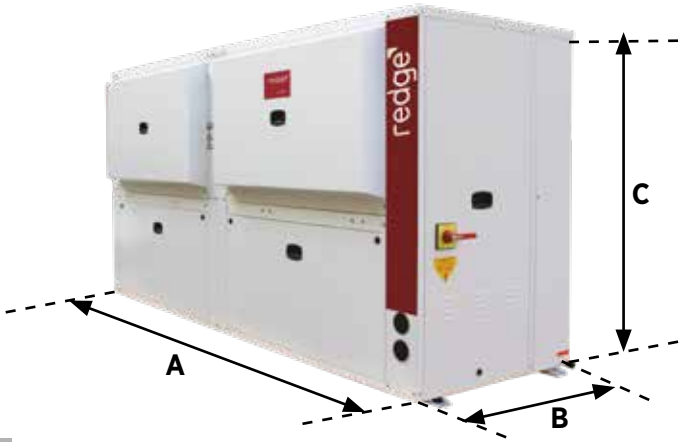

Air treatment unit

CIC/CIH

19 - 135 kW



CIC/CIH		20S	25S	30S	35S	40S	45D	55D	70D	85D	100D	120D*	140D*
Cooling mode - CIC													
Gross cooling capacity (1)	kW	19,9	24,2	27,9	36,5	41,9	48,7	57,3	72,4	86,0	103,9	116,2	140,6
Net cooling capacity (1)	kW	19,5	23,5	27,0	35,5	40,5	46,5	55,5	69,5	82,0	100,0	111,0	135,0
Heating mode - CIH													
Net heating capacity (2)	kW	19,5	25	28,5	36	40	49,5	56,5	72,5	80	108	118	137
Electrical heater capacity (option) Standard/Medium/High	kW	10	10	10	15	15	15	20	20	20	27	27	27
	kW	15	15	15	20	20	20	27	27	27	40	40	40
	kW	20	20	20	27	27	27	40	40	40	50	50	50
Hot water coil capacity (2)	kW	31	38	40	56	61	66	91	105	113	171	183	192
Ventilation													
Minimum airflow rate	m^3/h	3150	4250	4650	6200	6950	7950	9950	12450	14000	17350	19300	21000
Maximum airflow rate	m^3/h	4100	5500	6000	8050	9050	9750	12850	15090	16725	22450	24950	24750
Maximum available static pressure	Pa	685	672	650	729	833	812	747	711	680	812	784	828
Acoustic data (3)													
Blower outlet sound power level (Lw)		75	82	82	82	85	86	80	85	87	85	87	89

*The sizes 120D and 140D can be combined only with Condensing Unit AIRCOOLAIR (see page 145)

(1) Evaporating temperature = 7 °C / Ambiant air temperature = 35 °C
(2) Condensing temperature = 50 °C / Ambiant air temperature = 7 °C BS/6 °C BH

Dimensions

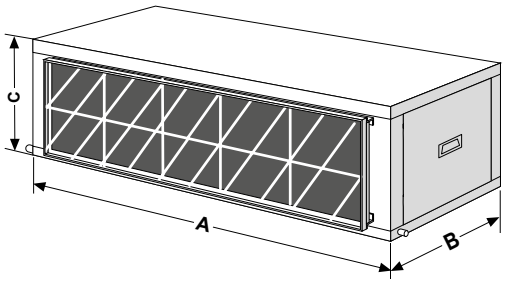

CIC/CIH		20 S	25 S	30 S	35 S	40 S	45 D	55 D	70 D	85 D	100 D	120 D	140 D
A	mm	1195			1445			2250			2900		
B	mm	840			960			960			1140		
C	mm	645			735			735			1140		
Operating weight (1)	kg	108	111	115	150	160	170	242	259	276	470	480	490

(1) Standard unit - Heat pump version

Vertical ductable condensing unit

CSC/CSH

20→100 kW



CSC/CSH		20S	25S	30S	35S	40S	45D	55D	70D	85D	100D
Cooling mode											
Net cooling capacity (1)	kW	18,8	23,1	26,0	33,8	38,8	43,5	54,0	66,2	78,0	96,8
Absorbed power (1)	kW	7,3	9,3	11,0	13,7	15,9	18,9	21,5	27,8	32,6	40,7
Heating mode											
Net heating capacity (1)	kW	19,7	25,9	30,4	37,2	43,7	52,0	61,0	72,8	86,0	105,1
Absorbed power (1)	kW	6,6	8,6	10,7	12,4	14,0	17,4	20,3	24,8	28,5	35,4
Electrical data											
Electrical supply		400V/3Ph/50Hz									
Refrigeration circuit											
Number of compressors / Number of circuits		1/1									
Total refrigerant load Cooling only / Heat pump	kg	4,3/ 4,5	5,4/ 5,5	6,0/ 6,2	7,8/ 8,0	9,0/ 9,3	10,3/ 10,6	12,5/ 12,6	15,5/ 16,0	18,5/ 19,1	23,0/ 25,2
Ventilation data											
Nominal airflow rate	m^3/h	7600	8500	10000	12000	11700	14000	20000	21000	22000	15500 + 11700
Maximum available static pressure	Pa	178	223	272	209	205	237	299	272	277	239 + 201
Acoustic data											
Blower outlet sound power level (Lw)	dB(A)	82	85	86	85	85	88	87	88	89	92

(1) EUROVENT conditions data

Cooling :
Outdoor temperature = 35°C DB
Entering coil temperature 27°C DB / 19°C WB

Heating :
Outdoor temperature = 7°C DB / 6°C WB
Indoor temperature = 20°C DB

Dimensions

Sizes 20S to 85D

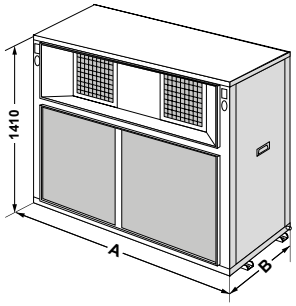

Sizes 100D

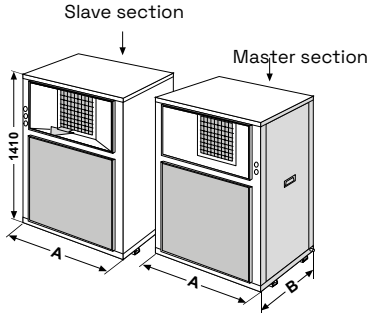

CSC/CSH		20S	25S	30S	35S	40S	45D	55D	70D	85D	100D
A	mm	1194			1445			2251			2 x 1450
B	mm	745			870			870			870
Operating weight (1)	kg	262	295	302	357	370	448	529	554	586	2 x 435

(1) Standard unit - Heat pump version

redge

AQUALEAN

Horizontal water-cooled packaged air conditioners



WATER COOLED R410A

2.79 - **41** kW

3.37 - **50** kW

670- **7500** m³/h

Compact solution with reduced height for ceiling installation.
Each unit responds to heating or cooling loads of different individual zones, improving overall **comfort**.
Water source heat pump able to reach very **high efficiency** in cooling and heating modes.
Variable speed direct transmission ventilation to **save energy** and lower operating costs.

AUXILIARY HEATING DEVICES

Electric heater as option on units 007 to 040.
Available in three different sizes:
- Standard capacity
- Medium capacity
- High capacity (only available on models 012 to 040).



AIR TREATMENT

EC motor fans ensuring a precise temperature for better comfort and energy savings.
Analogue filter detection to inform when the filters must be changed.
IAQ kits for improved indoor air quality inside buildings:
- G2 (standard) for all models
- M5 (ePM10) + F7 (ePM1) available as an option on models 007 to 040.

THERMODYNAMIC SYSTEM

Rotary compressor on models 003 only.
Scroll compressor on models 007 to 020.
Tandem scroll compressors on models 007 to 040.
Variable refrigerant control with electronic expansion valve.
Variable speed fans with optimized blade geometry to improve efficiency and reduce noise level.
Large surface exchangers for highly efficient heat transfer.

Photos and illustrations are not contractual.

AIRFLOW

Horizontal return air on all models.
Models 007 to 020: In-line or perpendicular supply air configuration (both horizontal).
Models 025 to 040: horizontal or vertical supply air configuration.

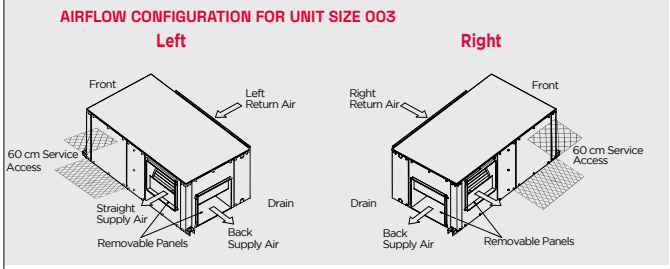

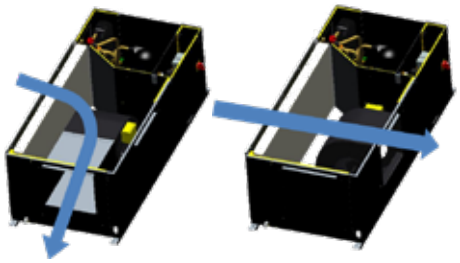

UNITS 007 to 020 Standard

UNITS 007 to 020 On site

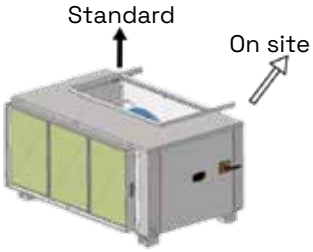

UNITS 025 to 040

WATER SYSTEM

Coaxial heat exchanger on units 003.
Brazed plate heat exchanger made of stainless steel on units 007 to 040.
Water threaded connections F-G on units 007 to 020.
Victaulic connections on units 025 to 040.



CONTROL

Climatic60 controller and intelligent control parameters optimising part-load efficiency.
Integrated communication solutions offering flexibility (master/slave, Modbus, BACnet).
Several display solutions for different access levels.

CLIMATIC60



DS Service display



DM Multi-unit display



DC Comfort display





Comfort display with integrated ambient thermostat **(only for units 003)**

Cool/Heat/On/Off/Fan & Auto selection
Supply / Return air temperature data
Condenser Inlet / Outlet Water temperature data
Weekly program
Monitoring and recording of recent faults

CASING & DESIGN

Compact self-supporting casing with very low height to reduce dropped ceilings dimension.
Casing built with galvanized steel.
Thermal-acoustic insulation is installed in the compressor area to reduce noise level:
- Units 007 to 020: 25mm A2, s1, d0 (M0) in the air treatment area.
- Units 007 to 040: 10mm (M1) insulation in air section.

AW(A) C(B) 007(C) S(D) N(E) M(F) 1(G) M(H) T(I)

(A) **AW** = AQUALEAN
(B) **C** = Cooling only - **H** = Heat pump
(C) Approximate cooling capacity in kW
(D) **S** = 1 circuit
(E) ---
(F) **M** = R-410A
(G) Revision number
(H) **T** = 230V/1/50Hz - **M** = 400V/1/50Hz
(I) Water temperature version

Water cooled version

Cooling only units

AQUALEAN - AWC		007	008	010	012	015	018	020
Nominal thermal performances - Cooling mode								
Cooling capacity (1)	kW	6,8	8,0	10,2	11,2	14,5	17,0	19,0
Total Power Input	kW	1,7	2,1	2,6	2,8	3,4	4,2	4,8
EER net (1)		4,00	3,81	3,92	4,00	4,26	4,05	3,96
Seasonal efficiencies - Cooling mode								
Seasonal Energy Efficiency Ratio - **SEER** (3)		-	-	-	-	-	-	-
Seasonal energy efficiency - **ηs,c** (4)	%	160,50	152,50	150,70	150,40	168,10	159,70	154,30
Auxiliary heating								
Electric heater capacity - Standard / High	kW	2 / 5	2 / 5	3 / 9	3 / 9	3 / 9	5 / 12	5 / 12
Ventilation data								
Minimum airflow rate	m^3/h	1010	1250	1550	1620	1850	2060	2450
Nominal airflow rate	m^3/h	1250	1500	1900	2000	2450	2800	3100
Maximum airflow rate	m^3/h	1430	1620	2100	2200	2610	3100	3500
Acoustic data (7)								
Sound pressure level - Low speed	dB(A)	49	50	48	49	49	46	47
Sound pressure level - High speed	dB(A)	51	52	51	51	53	51	54
Electrical data								
Maximum power	kW	2,7	3,3	4,1	4,9	5,7	6,3	7,6
Maximum current	A	14,4	17,6	24,6	28,6	12,9	14,7	17,9
Starting current	A	61,6	68,6	100,6	130,6	54,1	66,9	77,9
Short circuit current	kA	10	10	10	10	10	10	10
Water cooled condenser								
Nominal water flow rate	l/h	1450	1730	2190	2410	3070	3640	4090
Water pressure drop	kPa	25	30	40	48	40	45	55
Refrigeration circuit								
Number of circuits		1	1	1	1	1	1	1
Number of compressors		1	1	1	1	1	1	1
Refrigerant load	kg	1,3	1,3	1,9	1,9	2,4	2,9	2,9

(1) **Cooling mode :** According to EN14511 nominal conditions - Outdoor temperature 35°C DB - Indoor temperature 27°C DB / 19°C WB
(2) **Heating mode :** According to EN14511 nominal conditions - Outdoor temperature 7°C DB / 6°C WB - Indoor temperature 20°C DB
(3) SEER in accordance with standard EN14825.
(4) Space cooling energy efficiency following Ecodesign regulation EU 2016/2281
(5) SCOP in accordance with standard EN 14825 (average climate conditions).
(6) Space heating energy efficiency following Ecodesign regulation EU 2016/2281.
(7) Sound pressure level has been tested at a distance of 2m from the unit, with duct in aspiration and air discharge, normal absorption in accordance with room size and unit capacity.

AW(A) H(B) 007(C) S(D) N(E) M(F) 1(G) M(H) T(I)

(A) **AW** = AQUALEAN
(B) **C** = Cooling only - **H** = Heat pump
(C) Approximate cooling capacity in kW
(D) **S** = 1 circuit
(E) ---
(F) **M** = R-410A
(G) Revision number
(H) **T** = 230V/1/50Hz - **M** = 400V/1/50Hz
(I) Water temperature version

Water cooled version

Reversible units

AQUALEAN - AWH		007	008	010	012	015	018	020	025	030	040
Nominal thermal performances - Cooling mode											
Cooling capacity (1)	kW	6,8	8,0	10,2	11,2	14,5	17,0	19,0	24,8	30,8	41,0
Total Power Input	kW	1,7	2,1	2,6	2,8	3,4	4,2	4,8	5,20	6,70	9,50
EER net (1)		4,00	3,81	3,92	4,00	4,26	4,05	3,96	4,77	4,60	4,32
Seasonal efficiencies - Cooling mode											
Seasonal Energy Efficiency Ratio - **SEER** (3)		-	-	-	-	-	-	-	-	-	-
Seasonal energy efficiency - **ηs,c** (4)	%	160,50	152,50	150,70	150,40	168,10	159,70	154,30	259	253	225
Seasonal efficiencies - Heating mode											
Seasonal Coefficient of Performance - **SCOP** (5)		-	-	-	-	-	-	-	-	-	-
Seasonal energy efficiency - **ηs,h** (6)	%	103,30	102,50	108,80	105,30	106,30	105,60	99,00	158	166	161
Auxiliary heating											
Electric heater capacity - Standard / High	kW	2 / 5	2 / 5	3 / 9	3 / 9	3 / 9	5 / 12	5 / 12	10 / 20	10 / 20	10 / 20
Ventilation data											
Minimum airflow rate	m^3/h	1010	1250	1550	1620	1850	2060	2450	1800	2800	7500
Nominal airflow rate	m^3/h	1250	1500	1900	2000	2450	2800	3100	3700	5800	7500
Maximum airflow rate	m^3/h	1430	1620	2100	2200	2610	3100	3500	4500	6200	3700
Acoustic data (7)											
Sound pressure level - Low speed	dB(A)	49	50	48	49	49	46	47	50	52	56
Sound pressure level - High speed	dB(A)	51	52	51	51	53	51	54	56	61	63
Electrical data											
Maximum power	kW	2,7	3,3	4,1	4,9	5,7	6,3	7,6	11,5	13,9	17,4
Maximum current	A	14,4	17,6	24,6	28,6	12,9	14,7	17,9	20,2	24,8	34,3
Starting current	A	61,6	68,6	100,6	130,6	54,1	66,9	77,9	55,2	66,0	94,3
Short circuit current	kA	10	10	10	10	10	10	10	10	10	10
Water cooled condenser											
Nominal water flow rate	l/h	1450	1730	2190	2410	3070	3640	4090	4970	6200	8300
Water pressure drop	kPa	25	30	40	48	40	45	55	32	32	39
Refrigeration circuit											
Number of circuits		1	1	1	1	1	1	1	1	1	1
Number of compressors		1	1	1	1	1	1	1	1	1	1
Refrigerant load	kg	1,3	1,3	1,9	1,9	2,4	2,9	2,9	5,2	5,2	9,0

(1) **Cooling mode :** According to EN14511 nominal conditions - Outdoor temperature 35°C DB - Indoor temperature 27°C DB / 19°C WB
(2) **Heating mode :** According to EN14511 nominal conditions - Outdoor temperature 7°C DB / 6°C WB - Indoor temperature 20°C DB
(3) SEER in accordance with standard EN14825.
(4) Space cooling energy efficiency following Ecodesign regulation EU 2016/2281
(5) SCOP in accordance with standard EN 14825 (average climate conditions).
(6) Space heating energy efficiency following Ecodesign regulation EU 2016/2281.
(7) Sound pressure level has been tested at a distance of 2m from the unit, with duct in aspiration and air discharge, normal absorption in accordance with room size and unit capacity.

AWHP(A) 003(B) M(C) A(D) 1(E) 0(F) S(G) L(H) B(I)

(A) **AW** = AQUALEAN Reversible water source heat pump
(B) Unit model
(C) BMS : **M** = Modbus - **B** = Bacnet
(D) Revision number
(E) Power supply : **1** = Single-Phase - **3** = Three-Phase
(F) Electric Heater : **0** = No heater - **1** = Preheater - **2** = Post Heater
(G) Fan type : **S** = Standard Fan - **C** = Ec fan
(H) Return air direction : **L** = Left - **R** = Right
(I) Air discharge direction : **B** = Back - **S** = Straight

Water cooled version Reversible units

AQUALEAN - AWHP		003
Nominal thermal performances - Cooling mode		
Cooling capacity	kW	2,79
Total Power Input	kW	0,86
EER net		3,24
Nominal thermal performances - Heating mode		
Heating capacity	kW	3,37
Total Power Input	kW	0,89
COP net		3,78
Seasonal efficiencies - Cooling mode		
Seasonal Energy Efficiency Ratio - **SEER** (3)		3,07
Seasonal energy efficiency - **ηs,c** (4)	%	114,89
Seasonal efficiencies - Heating mode		
Seasonal Coefficient of Performance - **SCOP** (5)		3,31
Seasonal energy efficiency - **ηs,h** (6)	%	124,6
Ventilation data		
Nominal airflow rate	m3/h	670
External static pressure	Pa	128
Electrical data		
Power Supply Info	V/Ph/Hz	220 - 240/1/50/Neutral
Compressor		
Compressor Type		Rotary
Refrigerant		R410A
Total Refrigerant Charge	kg	0,8
Water cooled condenser		
Nominal water flow rate	l/s	0,17
Water side pressure drop	kPa	< 50
Water connection diameter	inch	1/2"
Dimensions and weight		
Lenght (A)	mm	945
Width (B)	mm	560
Height (C)	mm	377
Weight	kg	61



Entering air conditions of Cooling 27.0°C DB/19°C WB, and Heating 20.0°C DB/15°C WB entering air temperature.
(3) SEER in accordance with standard EN14825.
(4) Space cooling energy efficiency following Ecodesign regulation EU 2016/2281
(5) SCOP in accordance with standard EN 14825 (average climate conditions).
(6) Space heating energy efficiency following Ecodesign regulation EU 2016/2281.

Water cooled version

Cooling only units

AQUALEAN - AWC		07	08	10	12	15	18	20
A	mm	886	886	1180	1180	1180	1600	1600
B		492	492	623	623	623	703	703
C		441	441	491	491	491	531	531
Weight of standard units								
Basic unit	kg	69	70	109	111	113	148	148

Water cooled version

Reversible units

AQUALEAN - AWH		07	08	10	12	15	18	20	25	30	40
A	mm	886	886	1180	1180	1180	1600	1600	2049	2049	2049
B		492	492	623	623	623	703	703	895	895	895
C		441	441	491	491	491	531	531	770	770	770
Weight of standard units											
Basic unit	kg	71	72	111	113	116	151	151	370	375	380

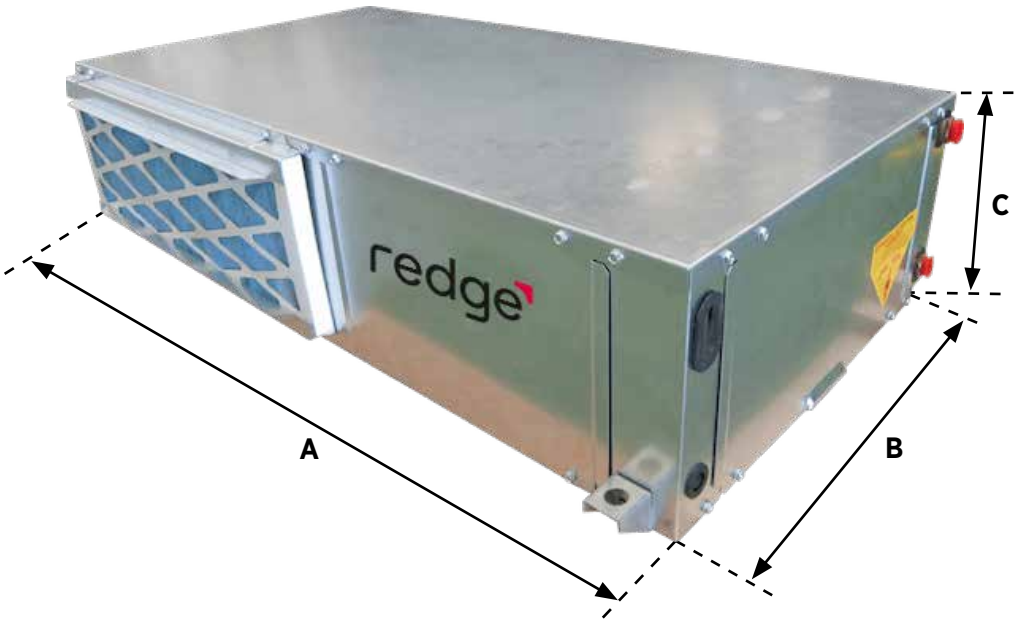

redge

NEXT LEVEL
HVAC SOLUTIONS

CONDENSING UNITS



AIRCOOLAIR 145

CONDENSING UNITS — AIR COOLED



AIRCOOLAIR

R410A

19,7 - 228 kW
19,8 - 218 kW

-

Air/Air
Water/Air

Cooling capacity
Heating capacity

Non food retail
Shopping malls
Office buildings

Hotels
Hospitals

The condensing units Aircoolair can be combined with all sizes of indoor unit of Compactair Essential CIC/CIH. (See page 133)

redge

AIRCOOLAIR

Air cooled condensing units



AIR COOLED R410A

19,7 - 228 kW

19,8 - 218 kW

- **Highly efficient** design that allows modulation between each circuit.
- Alternate defrost cycles improve system **reliability** and allows constant heating operation.
- Morning anticipation can be programmed to **ensure comfort** before the occupation periods.
- **High adaptability** to any load variation by managing up to four different operating modes and adapting the set point according to outdoor temperature.

CONTROL

- eClimatic electronic controller and intelligent control parameters optimising part-load efficiency.
- Integrated communication solutions offering flexibility (master/slave, Modbus, BACnet).
- Several display solutions for different access levels.

eCLIMATIC



DS
Service display



DM
Multi-Rooftop display



DC
Comfort display





CASING & DESIGN

- Casing made of galvanized steel sheet metal painted with a white RAL 9002 powdered polyester paint.
- Rigid, hot dipped galvanized chassis.
- Unit lifting and handling via the base frame.
- Side grilles as option to protect the unit during transportation.

EASY MAINTENANCE

- Refrigerant pressures and superheat on each circuit can be read directly on the service display.
- Units equipped with high and low-pressure transducers and refrigerant suction temperature sensors.
- No need to access to refrigerant pressure gauges.

Photos and illustrations are not contractual.

REFRIGERANT CIRCUIT

Tandem scroll compressors allowing capacity modulation.
High performance fan blades to improve efficiency and reduce noise level.
Large surface exchangers for highly efficient heat transfer.
Crankcase heater as standard on heat pump and optional with winter operation down to 0°C for cooling only units.
Active Acoustic Attenuation System with variable fan speed allows progressive adaptation of the unit to the building load while respecting the noise level constraints and the operating limits (option).







REFRIGERANT CIRCUIT

Two circuits allow capacity modulation from units 045D to 230D.
On cooling only units, each circuit includes as standard:
- High pressure switch with automatic reset.
- Low and high-pressure transducers.
On heat pumps units, each circuit includes in addition, as standard:
- Four-way valve.
- Liquid receiver.
- Thermostatic expansion valve.
- Filter drier.

ENERGY SAVINGS

Dynamic and alternate defrost.
Morning anticipation and dynamic set point.
Scheduling / Time zone Management.

A(A) S(B) C(C) 020(D) S(E) N(F) M(G) 3(H) M(I)

(A) **A** = AIRCOOLAIR
(B) **S** = Condensing unit
(C) **C** = Cooling only - **H** = Heat pump
(D) Cooling capacity in kW
(E) **S** = 1 circuit - **D** = 2 circuits
(F) **N** = Not used
(G) **M** = R410A
(H) Revision number
(I) **M** = 400V/3/50Hz

Air cooled version

AIRCOOLAIR		020S	025S	030S	035S	040S	045D	055D
Nominal thermal performances - Cooling mode (ASC)								
Cooling capacity (1)	kW	19,7	24,7	28,4	36,1	42,0	49,4	56,7
Total Power Input	kW	6,4	8,1	9,6	11,9	14,1	16,2	19,3
EER net (1)		3,06	3,05	2,95	3,03	2,98	3,05	2,94
Nominal thermal performances - Heating mode (ASH)								
Heating capacity (2)	kW	19,8	25,0	28,6	36,0	40,2	50,1	57,1
Total Power Input	kW	6,2	7,8	9,2	11,1	13,5	15,6	18,4
COP net (2)		3,20	3,2	3,12	3,24	2,98	3,21	3,10
Acoustic data - Standard unit								
Sound power level	dB(A)	76	78	81	80	81	81	84
Electrical data								
Maximum power	kW	8,6	10,8	12,5	16,4	17,7	21,6	25,0
Voltage		400V - 3Ph - 50Hz						
Refrigeration circuit								
Number of circuits		1	1	1	1	1	2	2
Number of compressors		1	1	1	1	1	2	2
Capacity steps		1	1	1	1	1	2	2

(1) **Cooling mode :** Evaporating temperature = 7°C / Ambient temperature = 35°C
(2) **Heating mode : Condensing temperature = 50°C / Ambient temperature = 7°C DB/6°C WB**

Air cooled version

AIRCOOLAIR		070D	085D	100D	120D	140D	200D	230D
Nominal thermal performances - Cooling mode (ASC)								
Cooling capacity (1)	kW	72,1	83,9	104,0	115,0	141,0	197,0	228,0
Total Power Input	kW	23,7	28,3	34,3	37,1	46,2	63,3	74,5
EER net (1)		3,04	2,96	3,03	3,10	3,05	3,11	3,06
Nominal thermal performances - Heating mode (ASH)								
Heating capacity (2)	kW	71,9	80,3	105,0	114,0	137,0	191,0	218,0
Total Power Input	kW	22,2	25,9	32,4	35,6	43,8	59,9	71,2
COP net (2)		3,24	3,10	3,24	3,20	3,13	3,19	3,1
Acoustic data - Standard unit								
Sound power level	dB(A)	83	84	87	87	90	89	82
Electrical data								
Maximum power	kW	32,8	35,5	45,6	48,7	59,9	83,0	96,2
Voltage		400V - 3Ph - 50Hz						
Refrigeration circuit								
Number of circuits		2	2	2	2	2	2	2
Number of compressors		2	2	3	3	3	4	4
Capacity steps		2	2	2	2	2	2	2

(1) **Cooling mode :** Evaporating temperature = 7°C / Ambient temperature = 35°C
(2) **Heating mode :** Condensing temperature = 50°C / Ambient temperature = 7°C DB/6°C WB

Air cooled version

AIRCOOLAIR		020S	025S	030S	035S	040S	045D	055D	070D	085D	100D	120D	140D	200D	230D
A	mm	1195	1195				1960				2250			2250	
B		660	980				1195				1420			2300	
C		1375	1635				1635				2155			2250	
Weight of standard units															
Basic unit	kg	168	219	221	239	258	452	463	499	537	748	828	932	1684	1704

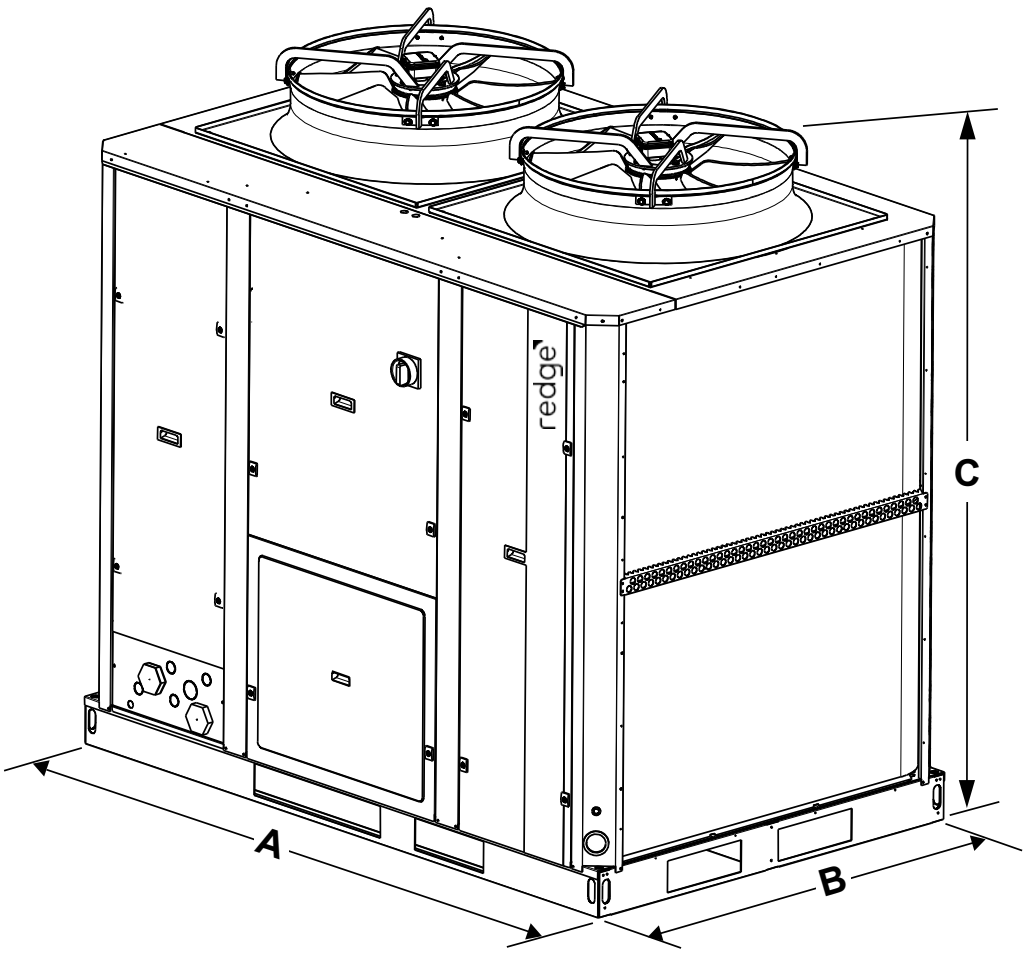

redge

NEXT LEVEL HVAC SOLUTIONS

VRF



e-Lite 153

VRF — AIR COOLED / WATER COOLED



e-Lite

HFC

8 - 270 kW
3 - 96 HP

Air/Air
Water/Air

Cooling and heating capacity
Compressor capacity

Cafés Restaurants
Convenience stores
Non food retail
Food retail

Cultural and sport centres
Office buildings
Hotels
Storage & Logistics

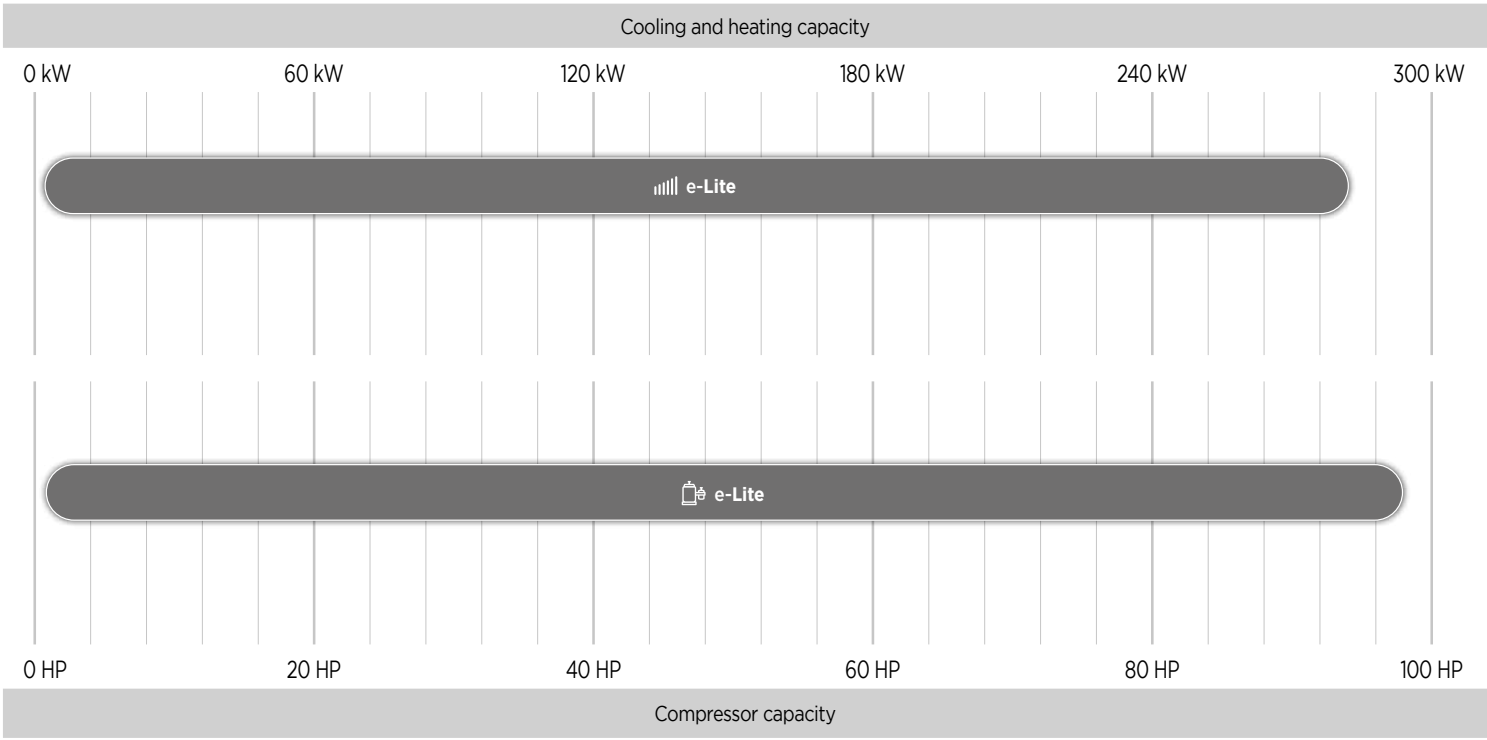

redge

e-Lite

VRF Commercial Air Conditioners



8 - 270 kW

3 - 96 HP

ErP READY DIRECTIVE 2009/125/EC

EUROVENT CERTIFIED PERFORMANCE www.eurovent-certification.com

- The Energy Management System (EMS) allows a perfect adjustment of the evaporating and condensing temperatures for **maximised comfort and energy efficiency**.
- The integration of cutting-edge technologies guarantees the units' optimal performance even under the harshest climates and environments, thus ensuring the installation's **robustness** in the long run.
- Available in wall mounted, four-way cassette or floor standing configurations, the e-Lite indoor units **perfectly suit many applications** from office buildings to retail environments of all sizes.
- Every indoor unit contains smart features to provide **optimal comfort** and increase **efficiency**.



PRECISION COOLING

- 40% to 100% cooling capacity modulation thanks to inverter compressors.

STEADY PERFORMANCE

- The automatic refrigerant detection prevents fluctuations and ensures a constant level within the unit.

TOP PROTECTION

- The innovatively designed auto snow-blowing & dust-clean functions prevent the accumulation of snow and dust on the outdoor unit.

REDUCED ENERGY CONSUMPTION

- All indoor units feature DC fans for maximum energy efficiency.

PERFECT AIRFLOW

- Thanks to the 5 swing angles for indoor unit louvres, the air flow direction can be controlled more precisely.

QUIET OPERATION

- The low sound operation fan motor and optimized fan blades guarantee the air discharges smoothly and provides a quiet living environment.



Photos and illustrations are not contractual.

WIDE OPERATING RANGE

The outdoor units operate in a wide ambient temperature range:
From -5°C to 48°C in cooling mode and from -25°C to 24°C in heating mode –> LV-XSO, LV-SO series
From -15°C to 55°C in cooling mode and from -30°C to 30°C in heating mode –> LV-XEO, LV-EO series



INCREASED REFRIGERANT SUBCOOLING

+10% energy efficiency thanks to the integration of the Plate Heat Exchanger as a secondary intercooler.

HIGH RELIABILITY

The precise oil control technology eliminates any compressor oil shortage problems and thus ensures the system's smooth operation.

EXTENDED LIFESPAN

Outdoor units are given as standard an anti-corrosion treatment for non-extreme conditions and can also be customized with heavy anti-corrosion treatment on main components for surface protection against corrosive air, acid rain and saline air (for installations in coastal regions) to extend the overall lifetime .

IDEAL INDOOR TEMPERATURE

The DC Inverter fan motor adjusts the airflow based on thermal load instantly providing less temperature fluctuation and an improved living environment.



BENEFITS OF REDGE VRF

Benefits for End-users	Benefits for Building Owners	Benefits for Consultants	Benefits for Construction Companies
Healthy Operation	Energy Saving Management	Diversified Solutions	Green Solutions
Cost Saving Operation	Reliable Operation	Professional Tool and Support	Space Saving Design
Comfortable Environment	Backup Solution	Design Flexibility	Intelligent Management

APPLICATION SOLUTIONS

High-rise office building	Shopping Malls	Hotels	Villas	Schools
Small and medium-sized office buildings	Retails	Apartments	Hospitals	Airports

HFC

	TYPE	PICTURE	CAPACITY RANGE (kW)	KEY TECHNOLOGIES
AIR COOLED-HEAT PUMP	LV-XSO / LV-SO – Top Discharge		LV-XSO 25,2 - 270,0* LV-SO 25,2 - 90	# R410A refrigerant # Wide capacity range # Full inverter compressors # Full DC fan motors # Precise oil control # Anti-corrosion protection # Intelligent defrosting technology # Multiple priority modes # Auto addressing
	LV-MSO - Side Discharge		20,0 ~ 33,5	
	LV-MEO / LV-XMEO - Side Discharge		LV-MEO 25,2 - 61,5 LV-XMEO 25,2 - 200*	# R410A refrigerant # Wide capacity range # Full DC Inverter Technology # Precise oil control # Advanced Subcooling Technology # Intelligent defrosting technology # 10 priority modes # Auto addressing # Low Standby Power Consumption # 60-step Energy Management # Fan and sensors backup # Advanced Silent Technology # Long Piping Capability # HyperLink: arbitrary Topology Communication # Refrigerant Amount Diagnosis # Enhanced Vapor Injection (EVI) Compressor
	LV-XEO / LV-EO - Top Discharge		LV-XEO 25,2 - 270,0* LV-EO 25,2 - 90	
	LV-MO2C – MINI VRF		8,0 - 18,0	# R410A refrigerant # Wide capacity range # Wide Operation Range # Long Piping Capability # Full DC Inverter Technology # High Efficiency # Anti-corrosion Protection # Refrigerant Cooling PCB # Intelligent Defrosting
	LV-MOEC – MINI VRF		8,0 - 18,0	# R410A & R32 refrigerant # Support Any Topology Communication #Super Anti-interference Capability #Virtual Sensor Backup # Full DC Inverter Technology # Advanced Subcooling Technology # 60-step Energy Management # Precise Oil Control # Anti-corrosion Protection # Advanced Silent Technology
AIR COOLED-HEAT RECOVERY	LV-RSO – Top Discharge		22,4 - 150,0	# R410A refrigerant # Wide capacity range # Full inverter compressors # Full DC fan motors # Precise oil control # Anti-corrosion protection # Intelligent defrosting technology # Multiple priority modes # Auto addressing

* Possibility to combine outdoor units

HYPERLINK

Redge original communication bus chip greatly simplifies installation and saves installation cost.
HyperLink communication technology supports any wiring pattern rather than just daisy chain connection, reducing the installation cost and the possibility of incorrect connection. It has stronger anti-interference ability, achieving communication distance up to 2000m.
Support Any Topology Communication

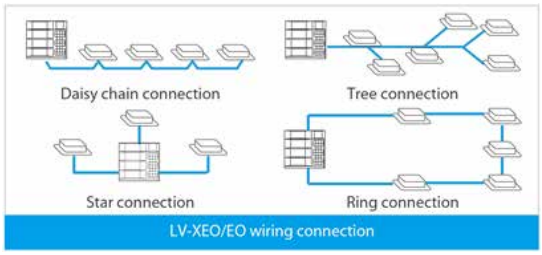

SHIELDBOX

IP55 fully enclosed electric control box provides all-round protection for internal electronic components, greatly improving system RELIABILITY.



SUPERSENSE

Up to 19 sensors are distributed throughout the refrigerant system, and the status of the refrigerant is known anywhere throughout the process, ensuring stable operation. At the same time, combined with the digital twin technology of the refrigerant system, a virtual sensor can be created in the event of a physical sensor failure, so that the system does not shut down in the event of a sensor failure, ensuring comfort.





Fa
physical sensor

generation of
virtual sensor

REFRIGERANT AMOUNT DIAGNOSIS

Thanks to the complete sensors, the refrigerant running state is clearly visible, so as to accurately diagnose the amount of refrigerant.

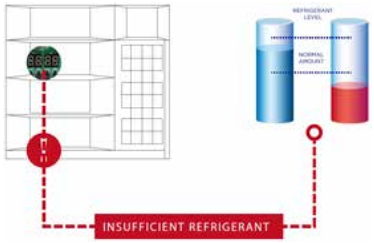

DOCTOR M 2.0

Based on a cloud-based platform of big data and artificial intelligence, the Redge Series VRF can monitor the operation status of each unit in real time, predict system faults in advance and provide data analysis for system maintenance. Intelligent Bluetooth module and special Bluetooth after-sales kit can further simplify maintenance and improve maintenance efficiency.

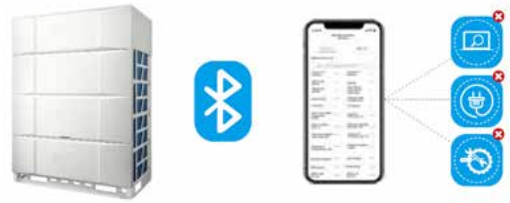

FREE CONTROL



Redge VRF can provide different control solutions for different application scenarios. From small homes and convenience stores to large shopping malls and complex buildings, Redge VRF can provide the most appropriate control solutions to achieve centralized and customized management.



HFC

3DC Indoor units

One-way Cassette	Two-way Cassette	Compact Four-way Cassette	Four-way Cassette	Arc Duct	Medium Static Pressure Duct
					
1.8-7.1kW, 7 models	2.2-7.1kW, 6 models	1.5-6.3kW, 7 models	2.8-16kW, 11 models	1.5-11.2kW, 10 models	1.5-16kW, 13 models
High Static Pressure Duct	**Wall Mounted**	**Ceiling & Floor**	**Floor Standing**	**Floor Standing**	**Fresh Air Processing Unit**
					
7.1-56kW, 12 models	1.5-9kW, 9 models	3.6-14kW, 8 models	2.2-7.1kW, 6 models	22.4/28kW, 2 models	11.2-56kW, 8 models

2DC/2AC Indoor Unit

One-way Cassette	Two-way Cassette	Compact Four-way Cassette	Four-way Cassette	Medium Static Pressure Duct
				
1.8-7.1kW, 7 models	2.2-7.1kW, 6 models	2.2-4.5kW, 5 models (DC) 1.8-4.5kW, 5 models (AC)	2.8-16kW, 11 models (DC) 2.8-14kW, 10 models (AC)	2.2-16kW, 11 models (DC) 2.2-14kW, 10 models (AC)
High Static Pressure Duct	**Wall Mounted**	**Ceiling & Floor**	**Floor Standing**	**Fresh Air Processing Unit**
				
7.1-56kW, 12 models	1.5-9kW, 9 models	3.6-16kW, 9 models (DC) 3.6-14kW, 8 models (AC)	2.2-7.1kW, 6 models	11.2-56kW, 8 models

360° AIRFLOW

New design, round air flow path ensures uniform air flow and temperature distribution.



INDIVIDUAL LOUVER CONTROL

The Individual louver control can control the motors separately, making it possible to control all four louvers independently.

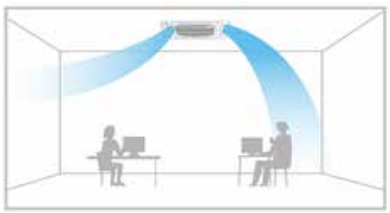

LONG DISTANCE AIR DELIVERY

The Four-way Cassette has an additional 50Pa static pressure for long airflow delivery and is capable of being used in spaces up to 4.5m in floor height.

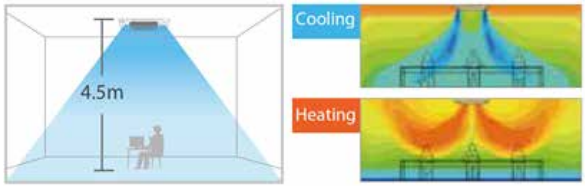

7 FAN SPEEDS

7 indoor fan speed options to meet the needs of different indoor conditions.



SLEEP MODE

The smart sleep mode provides a comfortable sleep period and a refreshing wake up time.



INNOVATIVE PURO-AIR KIT

Protectors of health and safety

From Germany - OSRAM quality UV light source

1st The world's first air conditioning sterilization product certification
99.9% Effective killing rate of white grape fungus
99.9% Effective killing rate of H1N1
98% Effective killing rate of natural bacteria
Ozone -Free
UV leakage-Free

ADDITIONAL ACCESSORIES

The heat recovery ventilator (LV-REC) can greatly reduce energy loss and room temperature fluctuations caused by the ventilation process.

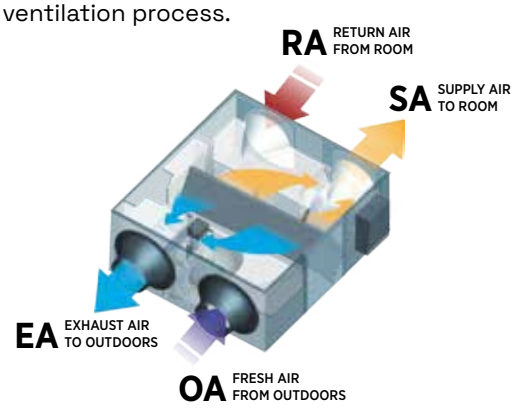

VRF DX AHU CONTROL BOX - AHU

Control Box facilitates raising the EER/COP of the complete AHU system.

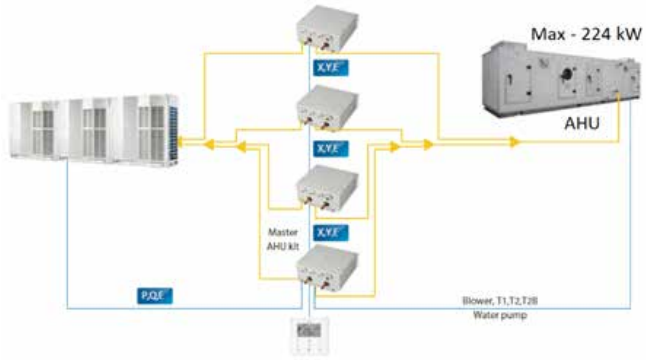

HOT WATER SUPPLY

The LV-RS0 system can produce hot water (25°C to 80°C) when providing room air conditioning. The hot water can be used for space heating and domestic hot water, improving room comfort.

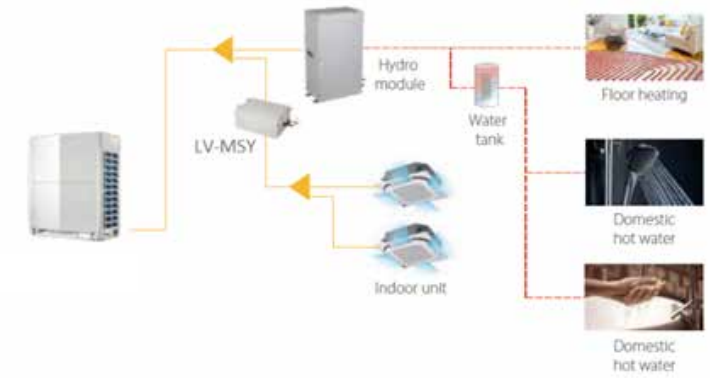

DIAGNOSIS SOFTWARE - REDGE VRF

Diagnosis Software tool is used to monitor VRF systems and diagnose system errors.
System settings and operating parameters can be accessed easily and data logs can be reviewed for fault prevention purposes.

Advance Control
Parameter setting and List
New Refrigerant System Diagram
Device Firmware version query and firmware upgrade
Dynamic system diagram only available for specific ODU series
Support 12 more languages.



redge

NEXT LEVEL HVAC SOLUTIONS

FAN COIL UNITS



ALLEGRA
ALLEGRA ECM
163



ARMONIA
ARMONIA ECM
181



COMFORTAIR HD3
COMFORTAIR HD3 ECM
197

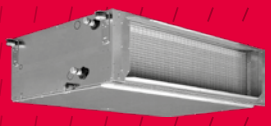

INALTO MPS
INALTO MPS ECM
205

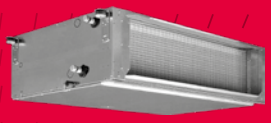

INALTO HPS
INALTO HPS ECM
233

AIR TREATMENT & VENTILATION	Pipe System	Cooling Range (kW)	Heating Range (kW)	Fan Type
Allegra Fan Coil Unit	2 & 4 pipes	0.7 – 11.6	1.2 – 8.5	
Armonia Cassette Fan Coil Unit	2 & 4 pipes	1.9 – 15.1	2.2 – 16.4	
Comfortair HD3 High Wall Fan Coil Unit	2 pipes	1.3 – 3.8	1.5 – 4.3	
Inalto MPS Ducted Fan Coil Units – Medium ESP	2 & 4 pipes	1.7 – 10.6	1.9 – 11.5	
Inalto HPS Ducted Fan Coil Units – High ESP	2 & 4 pipes	5.0 – 40	4.1 – 39.5	

CONTROLS & SUPERVISION	Allegra	Armonia	Comfortair HD3	Inalto MPS	Inalto HPS	Motor Type
MIV-3V Control	✓					AC
TMV-S Control	✓					AC
TMV-AU Control	✓					AC & EC
RCFF Control	✓	✓	✓	✓	✓	AC
RCFZ Control	✓	✓	✓	✓	✓	EC
ET2P Control			✓	✓		AC
TSMA Touch Screen Control	✓	✓	✓	✓	✓	AC & EC
TOTI Control[1]	✓	✓	✓	✓	✓	AC
AWUP Control[2]	✓	✓		✓	✓	AC & EC
DC65 Control[2]	✓	✓	✓	✓	✓	AC & EC
DM65 Control[3]	✓	✓				AC & EC
IRSP / MBIE Infra-Red Remote Controls[3]	✓	✓	✓	✓		AC & EC
Power Boards for AWUP Control[2]	✓	✓		✓	✓	AC & EC
MB Board Modbus Electronic Board[3]	✓	✓	✓	✓	✓	AC & EC

1. TOTI control will require SELS speed switch for sizes 3-7 of INALTO HPS.
2. AWUP Control must always be used together with a Power Board (TOAI for Allegra and Armonia, UPAU for Inalto MPS, and UPM or UPO for Inalto HPS).
3. The Controls DC65, IRSP and DM65 must always be used together with the MB Board.

Centrifugal fan Radial fan Tangential fan

redge

ALLEGRA
ALLEGRA ECM

Fan Coils Units

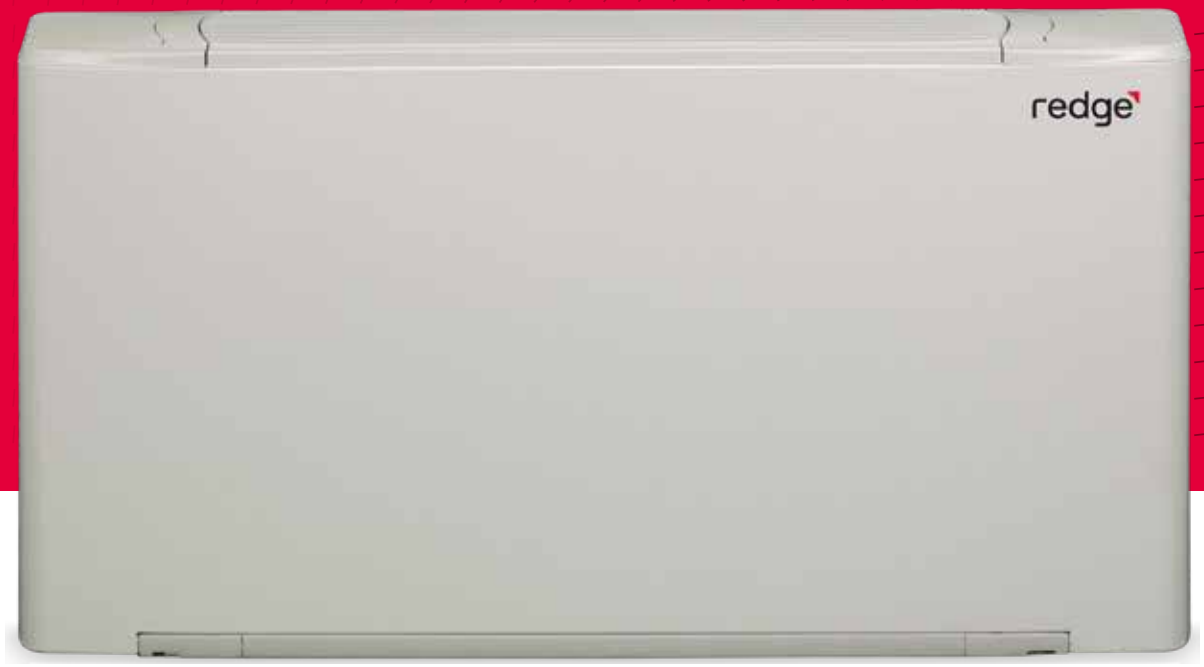

ALLEGRA	LSV	5	3	0	L
MODEL ALLEGRA ALLEGRA - ECM	**CASING** LSV - Vertical with Cabinet LSH - Horizontal with Cabinet LSB - Vertical with cabinet & intake grid LSN - Without Cabinet	**SIZE** 1 2 3 4 5 6 7 8 9	**MAIN COIL** 3 - 3 rows 4 - 4 rows	**MAIN COIL** 0 - 2 pipes +1 - 4 pipes + 1 row coil +2 - 4 pipes + 2 rows coil	**HYDRAULIC CONNECTIONS** L - Left R - Right

OUTER CASING

Made of galvanized and pre-painted steel casing.
The plastic top grid has fixed louvres and is reversible in order to distribute the air in two different directions.

Standard colours :

Top grid: **Pantone 427C (light grey)**
Frontal panel : **RAL 9003 (white)**
Other colours on request



INNER CASING

It is made with 1 mm galvanized steel, insulated with 3 mm polyolefin (PO) foam (B-s2-d0 EN 13501-1).

FAN ASSEMBLY

The fans have aluminium or plastic blades directly keyed on the motor with double aspiration and they are dynamically and statically balanced during manufacture in order to have an extremely quiet operation.

ELECTRIC MOTOR

The motor is wired for single phase supply and has six speeds, three of which are connected, with capacitor. The motor is fitted on sealed for life bearings and is secured on anti-vibration and self-lubricating mountings. Internal thermal protection with automatic reset, protection IP 20, class B.
The speeds connected in the factory are indicated by “MIN, MED and MAX” in the following tables.

CONDENSATE COLLECTION TRAY

Made of plastic (ABS UL94 HB) with a “L”-shaped plastic fitted on the inner casing.
In the LSH-LSB and NC model the tray is insulated with 3 mm polyolefin (PO) foam B-s2-d0 EN 13501-1.
The outside diameter of the condensate discharge pipe is Ø 15 mm.



COIL

It is manufactured from drawn copper tube and the aluminium fins are mechanically bonded onto the tube by an expansion process.
The coil has two Ø 1/2 inch BSP internal connections.
The coil has Ø 1/8” inch BSP air vent and drain.
The coil is not suitable for use in corrosive atmosphere or in environments where aluminium may be subject to corrosion.
The hydraulic connections are on the left side facing the unit.
On request we can deliver the unit with the connections on the right end side. This operation can also be easily carried out on the construction site during installation.

FILTER

Polypropylene cellular fabric regenerating filter.
The filter frame of galvanized steel is inserted into special plastic sliding guides fastened to the internal structure for easy insertion and filter removal.
Filter presence is highlighted by a plastic front cover featuring the same colour as the top grid.

3 ROW COIL - 2 PIPE UNITS

The following standard rating conditions are used:

COOLING

Entering air temperature: + 27 °C d.b. + 19 °C w.b.
Water temperature: +7 °C E.W.T. +12 °C L.W.T.

HEATING

Entering air temperature: + 20 °C
Water temperature: +45 °C E.W.T. +40 °C L.W.T.

MODEL		ALLEGRA 1.3-2T						ALLEGRA 2.3-2T						ALLEGRA 3.3-2T					
SPEED		1	2	3	4	5	6	1	2	3	4	5	6	1	2	3	4	5	6
		MIN			MED		MAX	MIN		MED		MAX			MIN	MED		MAX	
Air flow	m³/h	105	125	150	175	195	220	145	170	220	250	295	340	185	235	270	325	385	440
Cooling total emission	kW	0,57	0,66	0,75	0,84	0,91	1,00	0,90	0,99	1,23	1,35	1,53	1,70	1,27	1,55	1,76	2,04	2,35	2,61
Cooling sensible emission	kW	0,45	0,53	0,60	0,69	0,75	0,83	0,68	0,76	0,95	1,06	1,21	1,36	0,92	1,13	1,30	1,51	1,76	1,97
Heating emission	kW	0,64	0,76	0,86	0,98	1,07	1,19	0,94	1,06	1,34	1,49	1,70	1,92	1,26	1,56	1,79	2,10	2,44	2,74
Dp Cooling	kPa	2,5	3,0	3,8	4,7	5,4	6,3	2,5	3,0	4,4	5,3	6,5	7,9	6,6	9,4	11,8	15,3	19,7	23,8
Dp Heating	kPa	0,9	1,1	1,4	1,8	2,1	2,5	2,2	2,8	4,2	5,0	6,4	7,9	5,4	7,8	10,0	13,2	17,1	21,0
Fan	W	16,0	19,0	21,0	25,0	29,0	33,0	14,0	16,0	22,0	26,0	32,0	40,0	15,0	20,0	25,0	32,0	41,0	49,0
Sound power (Lw)	dB(A)	32	34	36	39	42	45	30	33	40	43	47	51	31	36	40	45	49	52
Sound pressure (Lp) (1)	dB(A)	23	25	27	30	33	36	21	24	31	34	38	42	22	27	31	36	40	43

MODEL		ALLEGRA 4.3-2T						ALLEGRA 5.3-2T						ALLEGRA 6.3-2T					
SPEED		1	2	3	4	5	6	1	2	3	4	5	6	1	2	3	4	5	6
			MIN	MED		MAX			MIN		MED		MAX	MIN		MED		MAX	
Air flow	m³/h	185	265	335	400	485	570	250	315	420	495	545	650	415	505	590	680	760	830
Cooling total emission	kW	1,25	1,71	2,11	2,43	2,83	3,19	1,66	2,01	2,55	2,90	3,13	3,58	2,50	2,94	3,32	3,70	4,01	4,26
Cooling sensible emission	kW	0,91	1,26	1,57	1,82	2,15	2,45	1,22	1,49	1,91	2,19	2,38	2,76	1,87	2,23	2,54	2,86	3,12	3,35
Heating emission	kW	1,25	1,74	2,18	2,52	2,97	3,41	1,65	2,02	2,61	3,00	3,24	3,75	2,56	3,05	3,45	3,90	4,26	4,56
Dp Cooling	kPa	6,5	11,2	16,2	20,8	27,2	33,8	4,1	5,8	8,8	11,1	12,7	16,2	8,6	11,4	14,1	17,2	19,8	22,1
Dp Heating	kPa	5,3	9,5	14,0	18,2	24,3	30,8	3,4	4,8	7,5	9,6	11,0	14,2	7,3	9,9	12,3	15,2	17,8	20,1
Fan	W	14,0	21,0	28,0	34,0	44,0	57,0	18,0	22,0	32,0	39,0	46,0	61,0	37,0	46,0	55,0	67,0	78,0	88,0
Sound power (Lw)	dB(A)	27	33	39	43	47	52	26	31	37	41	43	48	37	42	46	49	52	54
Sound pressure (Lp) (1)	dB(A)	18	24	30	34	38	43	17	22	28	32	34	39	28	33	37	40	43	45

MODEL		ALLEGRA 7.3-2T						ALLEGRA 8.3-2T						ALLEGRA 9.3-2T					
SPEED		1	2	3	4	5	6	1	2	3	4	5	6	1	2	3	4	5	6
			MIN		MED		MAX		MIN		MED		MAX		MIN		MED		MAX
Air flow	m³/h	445	535	630	735	840	925	510	655	815	1020	1100	1200	735	830	980	1210	1365	1500
Cooling total emission	kW	2,82	3,29	3,74	4,21	4,66	5,01	3,01	3,68	4,32	5,09	5,36	5,69	4,00	4,38	4,95	5,74	6,21	6,56
Cooling sensible emission	kW	2,08	2,45	2,80	3,19	3,56	3,85	2,27	2,82	3,35	4,02	4,26	4,55	3,08	3,40	3,89	4,60	5,03	5,37
Heating emission	kW	2,83	3,34	3,83	4,33	4,83	5,23	3,22	4,02	4,78	5,75	6,11	6,55	4,42	4,86	5,58	6,62	7,26	7,78
Dp Cooling	kPa	12,3	16,2	20,3	25,1	30,1	34,2	7,2	10,3	13,8	18,4	20,2	22,5	11,8	13,8	17,3	22,4	25,9	28,6
Dp Heating	kPa	10,1	13,5	17,2	21,3	25,9	29,7	5,6	8,3	11,3	15,6	17,3	19,6	12,9	16,2	21,1	27,8	33,0	37,0
Fan	W	44,0	54,0	66,0	79,0	92,0	103,0	47,0	62,0	81,0	105,0	116,0	130,0	78,0	92,0	108,0	134,0	152,0	176,0
Sound power (Lw)	dB(A)	38	42	47	51	54	56	39	45	50	56	58	60	47	50	54	58	62	64
Sound pressure (Lp) (1)	dB(A)	29	33	38	42	45	47	30	36	41	47	49	51	38	41	45	49	53	55

(1) The sound pressure levels are 9 dB (A) lower than the sound power levels, apply to the reverberant field of a 100 m³ room and a reverberation time of 0.5 sec.
MIN-MED-MAX = Speeds connected in the factory

4 ROW COIL - 2 PIPE UNITS

The following standard rating conditions are used:

COOLING

Entering air temperature: + 27 °C d.b. + 19 °C w.b.
Water temperature: +7 °C E.W.T. +12 °C L.W.T.

HEATING

Entering air temperature: + 20 °C
Water temperature: +45 °C E.W.T. +40 °C L.W.T.

MODEL		ALLEGRA 1.4-2T						ALLEGRA 2.4-2T						ALLEGRA 3.4-2T					
SPEED		1	2	3	4	5	6	1	2	3	4	5	6	1	2	3	4	5	6
		MIN			MED		MAX	MIN		MED		MAX			MIN	MED		MAX	
Air flow	m^3/h	105	125	150	175	195	220	145	170	220	250	295	340	185	235	270	325	385	440
Cooling total emission	kW	0,65	0,77	0,87	1,00	1,08	1,20	1,00	1,11	1,41	1,56	1,78	2,00	1,32	1,63	1,87	2,17	2,53	2,83
Cooling sensible emission	kW	0,49	0,58	0,66	0,77	0,84	0,94	0,73	0,82	1,05	1,17	1,35	1,53	0,95	1,18	1,36	1,59	1,86	2,09
Heating emission	kW	0,69	0,80	0,92	1,07	1,17	1,31	0,99	1,11	1,43	1,60	1,83	2,08	1,30	1,62	1,87	2,19	2,59	2,88
Dp Cooling	kPa	1,9	2,5	3,2	4,0	4,7	5,6	4,9	6,1	9,1	11,0	13,9	17,2	3,7	5,3	6,7	8,8	11,5	14,1
Dp Heating	kPa	1,7	2,2	2,8	3,7	4,3	5,3	4,0	4,9	7,6	9,3	11,8	14,8	2,8	4,2	5,4	7,1	9,8	11,5
Fan	W	16,0	19,0	21,0	25,0	29,0	33,0	14,0	16,0	22,0	26,0	32,0	40,0	15,0	20,0	25,0	32,0	41,0	49,0
Sound power (Lw)	dB(A)	32	34	36	39	42	45	30	33	40	43	47	51	31	36	40	45	49	52
Sound pressure (Lp) (1)	dB(A)	23	25	27	30	33	36	21	24	31	34	38	42	22	27	31	36	40	43

MODEL		ALLEGRA 4.4-2T						ALLEGRA 5.4-2T						ALLEGRA 6.4-2T					
SPEED		1	2	3	4	5	6	1	2	3	4	5	6	1	2	3	4	5	6
			MIN	MED		MAX			MIN		MED		MAX	MIN		MED		MAX	
Air flow	m^3/h	185	265	335	400	485	570	250	315	420	495	545	650	415	505	590	680	760	830
Cooling total emission	kW	1,31	1,81	2,25	2,62	3,08	3,50	1,77	2,17	2,79	3,21	3,49	4,03	2,79	3,34	3,81	4,31	4,71	5,04
Cooling sensible emission	kW	0,86	1,21	1,51	1,78	2,10	2,39	1,28	1,58	2,04	2,36	2,58	3,01	2,03	2,45	2,81	3,20	3,52	3,79
Heating emission	kW	1,28	1,80	2,27	2,64	3,14	3,62	1,71	2,10	2,74	3,16	3,46	4,01	2,82	3,39	3,90	4,46	4,92	5,31
Dp Cooling	kPa	3,4	6,1	9,0	11,7	15,5	19,6	7,3	10,4	16,3	20,8	24,2	31,3	14,4	19,7	24,8	30,9	36,2	40,9
Dp Heating	kPa	2,6	5,0	7,2	9,4	12,8	16,4	5,6	8,1	12,9	16,6	19,5	25,2	11,9	16,5	21,1	26,8	31,8	36,3
Fan	W	14,0	21,0	28,0	34,0	44,0	57,0	18,0	22,0	32,0	39,0	46,0	61,0	37,0	46,0	55,0	67,0	78,0	88,0
Sound power (Lw)	dB(A)	27	33	39	43	47	52	26	31	37	41	43	48	37	42	46	49	52	54
Sound pressure (Lp) (1)	dB(A)	18	24	30	34	38	43	17	22	28	32	34	39	28	33	37	40	43	45

MODEL		ALLEGRA 7.4-2T						ALLEGRA 8.4-2T						ALLEGRA 9.4-2T					
SPEED		1	2	3	4	5	6	1	2	3	4	5	6	1	2	3	4	5	6
			MIN		MED		MAX		MIN		MED		MAX		MIN		MED		MAX
Air flow	m^3/h	445	535	630	735	840	925	510	655	815	1020	1100	1200	735	830	980	1210	1365	1500
Cooling total emission	kW	2,99	3,51	4,01	4,56	5,08	5,48	3,22	3,97	4,72	5,63	5,94	6,34	4,34	4,79	5,45	6,41	6,98	7,42
Cooling sensible emission	kW	2,18	2,57	2,96	3,39	3,80	4,13	2,38	2,98	3,58	4,33	4,59	4,93	3,28	3,63	4,18	4,98	5,48	5,87
Heating emission	kW	2,95	3,49	4,03	4,62	5,15	5,59	3,37	4,26	5,14	6,27	6,60	7,20	4,70	5,23	6,01	7,18	7,93	8,52
Dp Cooling	kPa	9,5	12,5	15,9	20,0	24,2	27,7	9,6	14,0	19,0	26,0	28,6	32,2	8,9	10,6	13,4	17,8	20,7	23,2
Dp Heating	kPa	7,5	10,1	13,1	16,6	20,1	23,2	8,5	12,8	17,9	24,9	27,8	31,7	8,3	10,0	12,8	17,6	20,9	23,7
Fan	W	44,0	54,0	66,0	79,0	92,0	103,0	47,0	62,0	81,0	105,0	116,0	130,0	78,0	92,0	108,0	134,0	152,0	176,0
Sound power (Lw)	dB(A)	38	42	47	51	54	56	39	45	50	56	58	60	47	50	54	58	62	64
Sound pressure (Lp) (1)	dB(A)	29	33	38	42	45	47	30	36	41	47	49	51	38	41	45	49	53	55

(1) The sound pressure levels are 9 dB (A) lower than the sound power levels, apply to the reverberant field of a 100 m^3 room and a reverberation time of 0.5 sec.
MIN-MED-MAX = Speeds connected in the factory

3+1 ROW COIL - 4 PIPE UNITS

The following standard rating conditions are used:

COOLING

Entering air temperature: + 27 °C d.b. + 19 °C w.b.
Water temperature: +7 °C E.W.T. +12 °C L.W.T.

HEATING

Entering air temperature: + 20 °C
Water temperature: +65 °C E.W.T. +55 °C L.W.T.

MODEL		ALLEGRA 1.3-4T						ALLEGRA 2.3-4T						ALLEGRA 3.3-4T					
SPEED		1	2	3	4	5	6	1	2	3	4	5	6	1	2	3	4	5	6
		MIN			MED		MAX	MIN		MED		MAX			MIN	MED		MAX	
Air flow	m^3/h	105	125	150	175	195	220	145	170	220	250	295	340	185	235	270	325	385	440
Cooling total emission	kW	0,57	0,66	0,75	0,84	0,91	1,00	0,90	0,99	1,23	1,35	1,53	1,70	1,27	1,55	1,76	2,04	2,35	2,61
Cooling sensible emission	kW	0,45	0,53	0,60	0,69	0,75	0,83	0,68	0,76	0,95	1,06	1,21	1,36	0,92	1,13	1,30	1,51	1,76	1,97
Heating emission	kW	0,55	0,62	0,69	0,77	0,83	0,91	0,83	0,91	1,09	1,19	1,33	1,47	1,19	1,40	1,56	1,76	1,99	2,18
Dp Cooling	kPa	0,9	1,1	1,4	1,7	2,0	2,3	2,5	3,0	4,4	5,3	6,5	7,9	6,6	9,4	11,8	15,3	19,7	23,8
Dp Heating	kPa	0,5	0,7	0,8	1,0	1,1	1,3	1,3	1,6	2,2	2,5	3,1	3,7	3,2	4,2	5,1	6,3	7,8	9,2
Fan	W	16,0	19,0	21,0	25,0	29,0	33,0	14,0	16,0	22,0	26,0	32,0	40,0	15,0	20,0	25,0	32,0	41,0	49,0
Sound power (Lw)	dB(A)	32	34	36	39	42	45	30	33	40	43	47	51	31	36	40	45	49	52
Sound pressure (Lp) (1)	dB(A)	23	25	27	30	33	36	21	24	31	34	38	42	22	27	31	36	40	43

MODEL		ALLEGRA 4.3-4T						ALLEGRA 5.3-4T						ALLEGRA 6.3-4T					
SPEED		1	2	3	4	5	6	1	2	3	4	5	6	1	2	3	4	5	6
			MIN	MED		MAX			MIN		MED		MAX	MIN		MED		MAX	
Air flow	m^3/h	185	265	335	400	485	570	250	315	420	495	545	650	415	505	590	680	760	830
Cooling total emission	kW	1,25	1,71	2,11	2,43	2,83	3,19	1,66	2,01	2,55	2,90	3,13	3,58	2,50	2,94	3,32	3,70	4,01	4,26
Cooling sensible emission	kW	0,91	1,26	1,57	1,82	2,15	2,45	1,22	1,49	1,91	2,19	2,39	2,76	1,87	2,23	2,54	2,86	3,12	3,35
Heating emission	kW	1,18	1,52	1,81	2,04	2,33	2,60	1,55	1,84	2,22	2,50	2,66	3,00	2,19	2,51	2,79	3,09	3,33	3,53
Dp Cooling	kPa	6,5	11,2	16,2	20,8	27,2	33,8	5,4	7,6	11,5	14,6	16,7	21,1	8,6	11,4	14,1	17,2	19,8	22,1
Dp Heating	kPa	3,8	6,0	8,0	10,0	12,5	15,3	1,0	1,3	1,9	2,3	2,6	3,2	1,8	2,3	2,8	3,3	3,8	4,2
Fan	W	14,0	21,0	28,0	34,0	44,0	57,0	18,0	22,0	32,0	39,0	46,0	61,0	37,0	46,0	55,0	67,0	78,0	88,0
Sound power (Lw)	dB(A)	27	33	39	43	47	52	26	31	37	41	43	48	37	42	46	49	52	54
Sound pressure (Lp) (1)	dB(A)	18	24	30	34	38	43	17	22	28	32	34	39	28	33	37	40	43	45

MODEL		ALLEGRA 7.3-4T						ALLEGRA 8.3-4T						ALLEGRA 9.3-4T					
SPEED		1	2	3	4	5	6	1	2	3	4	5	6	1	2	3	4	5	6
			MIN		MED		MAX		MIN		MED		MAX		MIN		MED		MAX
Air flow	m^3/h	445	535	630	735	840	925	510	655	815	1020	1100	1200	735	830	980	1210	1365	1500
Cooling total emission	kW	2,82	3,29	3,74	4,21	4,66	5,01	3,01	3,68	4,32	5,09	5,36	5,69	4,00	4,38	4,95	5,74	6,21	6,56
Cooling sensible emission	kW	2,08	2,45	2,80	3,19	3,56	3,85	2,27	2,82	3,35	4,02	4,26	4,55	3,08	3,40	3,89	4,60	5,03	5,37
Heating emission	kW	2,54	2,89	3,23	3,59	3,94	4,20	2,66	3,16	3,66	4,26	4,48	4,75	3,41	3,71	4,15	4,79	5,17	5,46
Dp Cooling	kPa	12,3	16,2	20,3	25,1	30,1	34,2	7,2	10,3	13,8	18,4	20,2	22,5	12,5	14,6	18,2	23,6	27,3	30,1
Dp Heating	kPa	2,8	3,5	4,2	5,1	6,0	6,7	3,0	4,1	5,3	6,9	7,5	8,3	4,7	5,4	6,6	8,5	9,7	10,7
Fan	W	44,0	54,0	66,0	79,0	92,0	103,0	47,0	62,0	81,0	105,0	116,0	130,0	78,0	92,0	108,0	134,0	152,0	176,0
Sound power (Lw)	dB(A)	38	42	47	51	54	56	39	45	50	56	58	60	47	50	54	58	62	64
Sound pressure (Lp) (1)	dB(A)	29	33	38	42	45	47	30	36	41	47	49	51	38	41	45	49	53	55

(1) The sound pressure levels are 9 dB (A) lower than the sound power levels, apply to the reverberant field of a 100 m^3 room and a reverberation time of 0.5 sec.
MIN-MED-MAX = Speeds connected in the factory

LSV

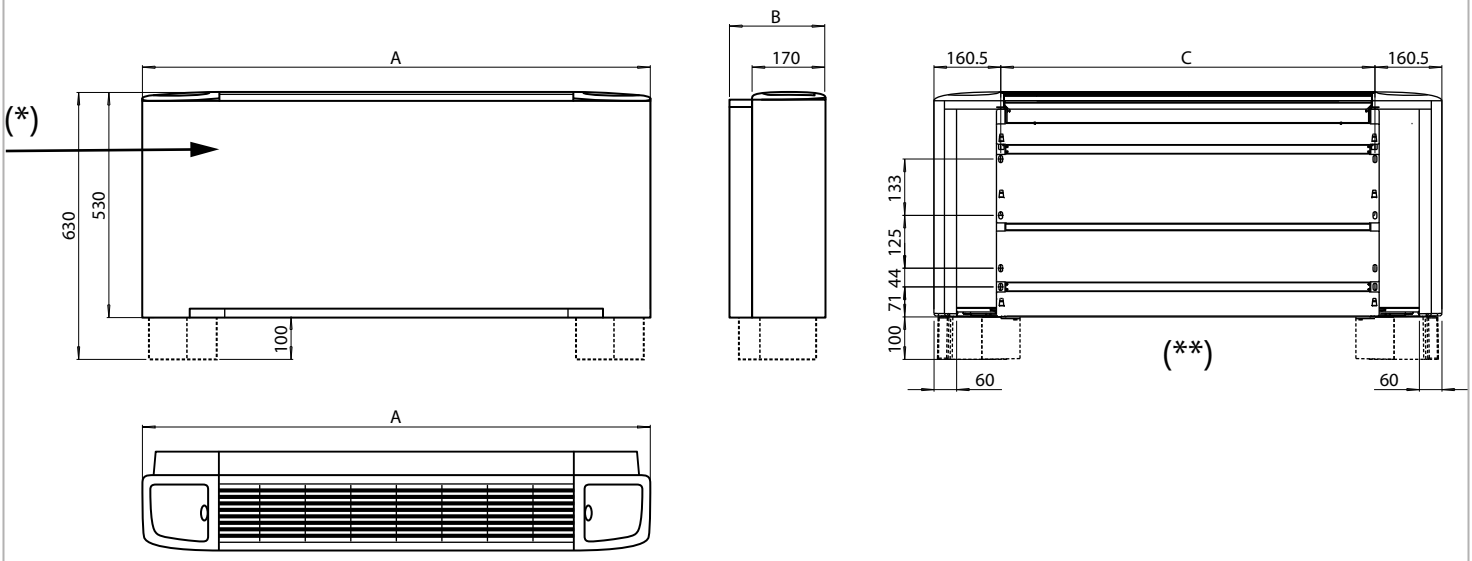

(*) Coil connections on the left
(**) Feet (optional)

LSH-LSB

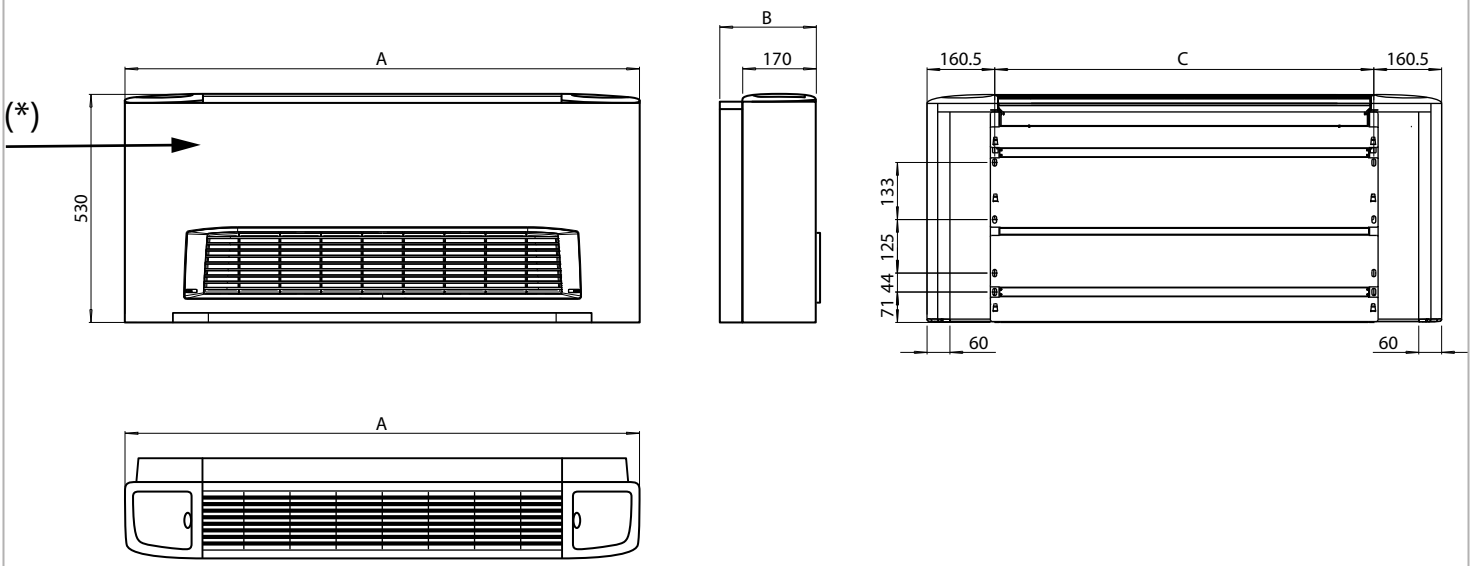

(*) Coil connections on the left

MODEL		ALLEGRA 1	ALLEGRA 2	ALLEGRA 3	ALLEGRA 4	ALLEGRA 5	ALLEGRA 6	ALLEGRA 7	ALLEGRA 8	ALLEGRA 9
A	mm	675	775	990		1205		1420		
B	mm	225							255	
C	mm	354	454	669		884		1099		

PACKED UNIT

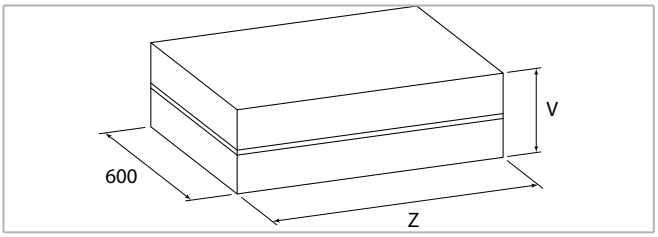

MODEL		1	2	3	4	5	6	7	8	9
V	mm	260							290	
Z	mm	720	820	1035		1250		1465		

WEIGHT (KG)

Weight with packaging

MODEL	1	2	3	4	5	6	7	8	9
3 rows	15,5	17,2	21,4	22,5	26,9	27,7	32,1	35,7	35,9
3+1 rows	16,2	18,0	22,6	23,7	28,4	29,2	33,9	37,5	37,7
3+2 rows	16,7	18,6	23,3	24,4	29,3	30,1	35,0	38,6	38,8
4 rows	16,0	18,0	22,4	23,5	28,1	29,0	33,6	37,2	37,4
4+1 rows	16,7	18,8	23,6	24,7	29,6	30,5	35,4	39,0	39,2

Weight without packaging

MODEL	1	2	3	4	5	6	7	8	9
3 rows	13,9	15,4	19,1	20,2	24,1	24,9	28,8	32,0	32,2
3+1 rows	14,6	16,2	20,3	21,4	25,6	26,4	30,6	33,8	34,0
3+2 rows	15,1	16,8	21,0	22,1	26,5	27,3	31,7	34,9	35,1
4 rows	14,4	16,2	20,1	21,2	25,3	26,2	30,3	33,5	33,7
4+1 rows	15,1	17,0	21,3	22,4	26,8	27,7	32,1	35,3	35,5

LSN VERTICAL INSTALLATION

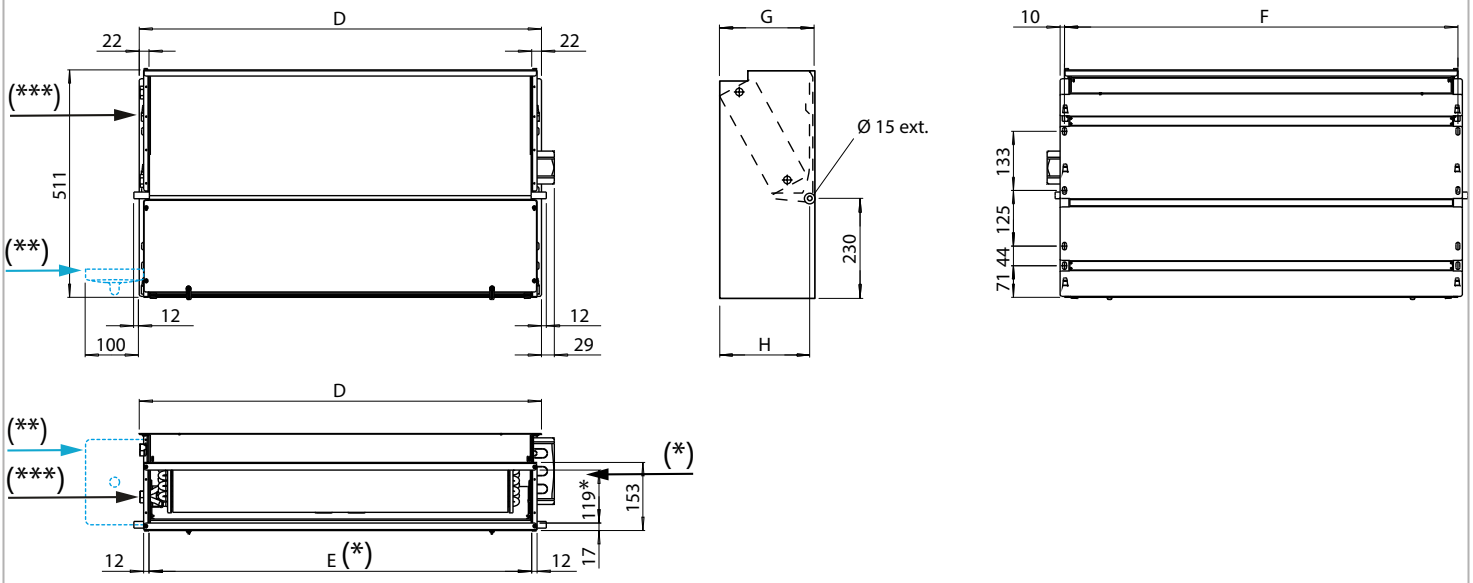

(*) = Supply frame dimension E x 119 mm
(**) = Auxiliary condensate tray (optional)
(***) = Coil connections on the left

LSN HORIZONTAL INSTALLATION

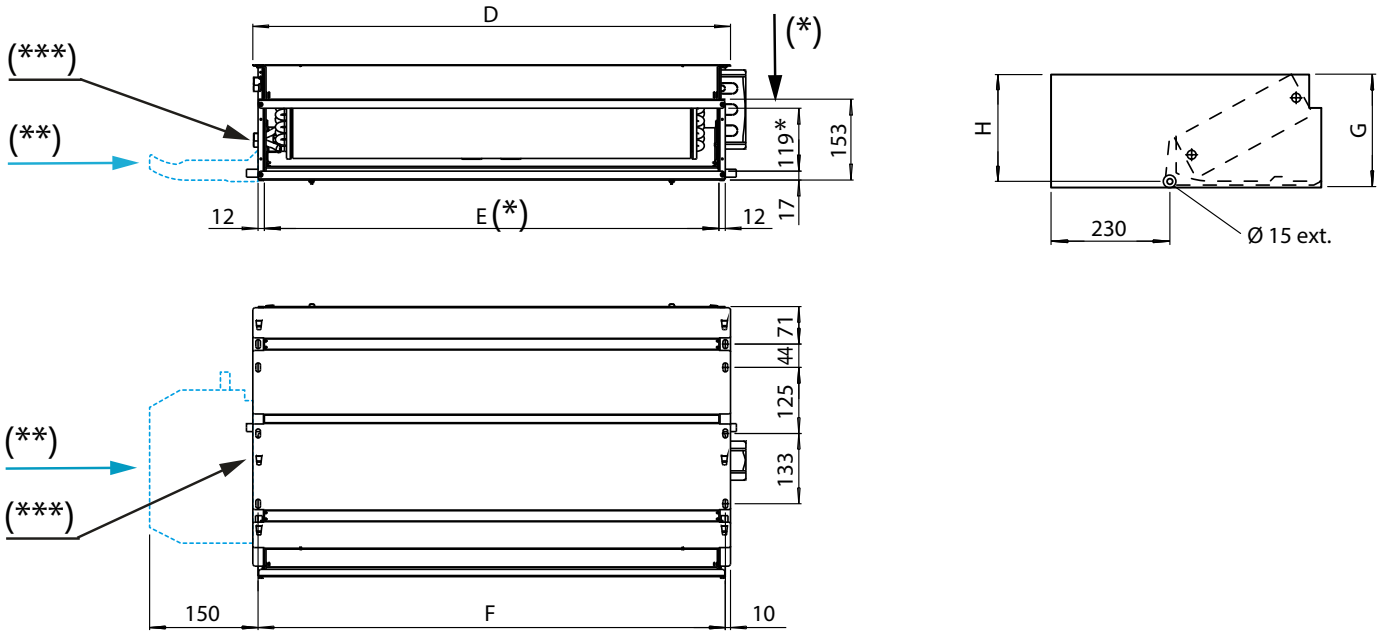

(*) = Supply frame dimension E x 119 mm
(**) = Auxiliary condensate tray (optional)
(***) = Coil connections on the left

MODEL		ALLEGRA 1	ALLEGRA 2	ALLEGRA 3	ALLEGRA 4	ALLEGRA 5	ALLEGRA 6	ALLEGRA 7	ALLEGRA 8	ALLEGRA 9
D	mm	374	474	689		904		1119		
E	mm	330	430	645		860		1075		
F	mm	354	454	669		884		1099		

PACKED UNIT

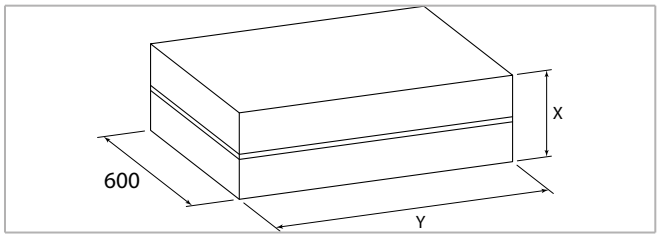

MODEL		1	2	3	4	5	6	7	8	9
X	mm	260							290	
Y	mm	720	820			1035		1250		

WEIGHT (KG)

Weight with packaging

MODEL	1	2	3	4	5	6	7	8	9
3 rows	12,2	13,6	17,1	18,1	21,9	22,8	27,0	30,2	30,4
3+1 rows	12,9	14,4	18,3	19,3	23,4	24,3	28,8	32,0	32,2
3+2 rows	13,4	15,0	19,0	20,0	24,3	25,2	29,9	33,1	33,3
4 rows	12,7	14,4	18,1	19,1	23,1	24,1	28,5	31,7	31,9
4+1 rows	13,4	15,2	19,3	20,3	24,6	25,6	30,3	33,5	33,7

Weight without packaging

MODEL	1	2	3	4	5	6	7	8	9
3 rows	10,6	11,8	15,3	16,3	19,6	20,5	24,2	27,1	27,3
3+1 rows	11,3	12,6	16,5	17,5	21,1	22,0	26,0	28,9	29,1
3+2 rows	11,8	13,2	17,2	18,2	22,0	22,9	27,1	30,0	30,2
4 rows	11,1	12,6	16,3	17,3	20,8	21,8	25,7	28,6	28,8
4+1 rows	11,8	13,4	17,5	18,5	22,3	23,3	27,5	30,4	30,6

3 ROW COIL - 2 PIPE UNITS

The following standard rating conditions are used:

COOLING

Entering air temperature: + 27 °C d.b. + 19 °C w.b.
Water temperature: +7 °C E.W.T. +12 °C L.W.T.

HEATING

Entering air temperature: + 20 °C
Water temperature: +45 °C E.W.T. +40 °C L.W.T.

MODEL		ALLEGRA-ECM 2.3-2T					ALLEGRA-ECM 4.3-2T					ALLEGRA-ECM 6.3-2T				
INVERTER SPEED SIGNAL (VDC)		1	3	5	7,5	10	1	3	5	7,5	10	1	3	5	7,5	10
		MIN		MED		MAX	MIN		MED		MAX	MIN		MED		MAX
Air flow	m^3/h	120	170	220	270	330	210	280	350	430	515	305	395	495	610	735
Cooling total emission	kW	0,73	0,97	1,18	1,37	1,59	1,41	1,80	2,18	2,57	2,95	1,96	2,44	2,93	3,44	3,96
Cooling sensible emission	kW	0,55	0,74	0,92	1,09	1,28	1,03	1,33	1,64	1,95	2,26	1,46	1,83	2,22	2,64	3,08
Heating emission	kW	0,77	1,04	1,29	1,52	1,80	1,42	1,84	2,26	2,69	3,14	1,96	2,46	3,00	3,55	4,14
Dp Cooling	kPa	2,2	3,6	5,1	6,7	8,6	7,9	12,0	17,0	22,6	28,9	5,5	8,0	11,1	14,8	19,0
Dp Heating	kPa	1,6	2,7	3,9	5,2	7,0	6,6	10,4	14,9	20,4	26,7	4,5	6,8	9,6	12,9	17,0
Fan	W	7,0	9,0	11,0	15,0	21,0	6,0	9,0	12,0	17,0	25,0	7,0	10,0	15,0	22,0	32,0
Sound power (Lw)	dB(A)	30	36	41	47	51	30	36	42	47	51	33	38	44	49	54
Sound pressure (Lp) (1)	dB(A)	21	27	32	38	42	21	27	33	38	42	24	29	35	40	45

MODEL		ALLEGRA-ECM 7.3-2T					ALLEGRA-ECM 9.3-2T				
INVERTER SPEED SIGNAL (VDC)		1	3	5	7,5	10	1	3	5	7,5	10
		MIN		MED		MAX	MIN		MED		MAX
Air flow	m^3/h	400	500	610	755	890	605	785	945	1175	1395
Cooling total emission	kW	2,60	3,13	3,68	4,36	4,94	3,45	4,22	4,82	5,60	6,26
Cooling sensible emission	kW	1,92	2,33	2,77	3,32	3,80	2,63	3,28	3,79	4,49	5,10
Heating emission	kW	2,56	3,13	3,72	4,43	5,08	3,74	4,65	5,41	6,46	7,38
Dp Cooling	kPa	10,5	14,5	19,4	26,1	32,6	8,9	12,7	16,1	21,1	25,9
Dp Heating	kPa	8,5	12,1	16,4	22,2	28,3	7,3	10,7	14,0	19,1	24,2
Fan	W	9,0	13,0	18,5	28,5	41,0	16,0	25,0	41,0	65,0	99,0
Sound power (Lw)	dB(A)	37	43	48	53	57	44	50	55	60	64
Sound pressure (Lp) (1)	dB(A)	28	34	39	44	48	35	41	46	51	55

(1) The sound pressure levels are 9 dB (A) lower than the sound power levels, apply to the reverberant field of a 100 m^3 room and a reverberation time of 0.5 sec.

4 ROW COIL - 2 PIPE UNITS

The following standard rating conditions are used:

COOLING

Entering air temperature: + 27 °C d.b. + 19 °C w.b.
Water temperature: +7 °C E.W.T. +12 °C L.W.T.

HEATING

Entering air temperature: + 20 °C
Water temperature: +45 °C E.W.T. +40 °C L.W.T.

MODEL		ALLEGRA-ECM 2.4-2T					ALLEGRA-ECM 4.4-2T					ALLEGRA-ECM 6.4-2T				
INVERTER SPEED SIGNAL (VDC)		1	3	5	7,5	10	1	3	5	7,5	10	1	3	5	7,5	10
		MIN		MED		MAX	MIN		MED		MAX	MIN		MED		MAX
Air flow	m^3/h	115	160	210	260	325	200	265	340	415	505	290	375	475	590	720
Cooling total emission	kW	0,77	1,06	1,32	1,57	1,86	1,43	1,83	2,27	2,71	3,17	2,05	2,59	3,19	3,84	4,51
Cooling sensible emission	kW	0,56	0,78	0,98	1,19	1,42	1,03	1,34	1,67	2,02	2,39	1,48	1,89	2,34	2,84	3,38
Heating emission	kW	0,78	1,08	1,37	1,65	1,98	1,42	1,83	2,30	2,77	3,32	2,02	2,59	3,23	3,93	4,68
Dp Cooling	kPa	3,2	5,5	8,0	11,0	14,8	4,0	6,1	8,9	12,3	16,1	8,2	12,4	17,8	24,8	33,0
Dp Heating	kPa	2,6	4,7	7,1	9,9	13,6	3,1	4,9	7,3	10,2	13,7	6,6	10,3	15,1	21,4	29,1
Fan	W	7,0	8,8	11,0	14,6	21,0	6,0	9,0	12,0	17,0	25,0	7,0	10,0	15,0	22,0	32,0
Sound power (Lw)	dB(A)	30	36	41	47	51	30	36	42	47	51	33	38	44	49	54
Sound pressure (Lp) (1)	dB(A)	21	27	32	38	42	21	27	33	38	42	24	29	35	40	45

MODEL		ALLEGRA-ECM 7.4-2T					ALLEGRA-ECM 9.4-2T				
INVERTER SPEED SIGNAL (VDC)		1	3	5	7,5	10	1	3	5	7,5	10
		MIN		MED		MAX	MIN		MED		MAX
Air flow	m^3/h	380	475	585	735	875	575	755	910	1145	1365
Cooling total emission	kW	2,61	3,20	3,82	4,61	5,30	3,59	4,49	5,21	6,18	7,04
Cooling sensible emission	kW	1,90	2,34	2,82	3,44	3,99	2,69	3,40	3,99	4,81	5,53
Heating emission	kW	2,57	3,17	3,84	4,66	5,43	3,76	4,81	5,63	6,84	7,93
Dp Cooling	kPa	7,3	10,5	14,3	20,0	25,6	6,3	9,3	12,1	16,4	20,8
Dp Heating	kPa	5,9	8,6	12,0	16,9	22,0	5,6	8,7	11,4	16,1	20,9
Fan	W	9,0	13,0	18,5	28,5	41,0	16,0	25,0	41,0	65,0	99,0
Sound power (Lw)	dB(A)	37	43	48	53	57	44	50	55	60	64
Sound pressure (Lp) (1)	dB(A)	28	34	39	44	48	35	41	46	51	55

(1) The sound pressure levels are 9 dB (A) lower than the sound power levels, apply to the reverberant field of a 100 m^3 room and a reverberation time of 0.5 sec.

3+1 ROW COIL - 4 PIPE UNITS

The following standard rating conditions are used:

COOLING

Entering air temperature: + 27 °C d.b. + 19 °C w.b.
Water temperature: +7 °C E.W.T. +12 °C L.W.T.

HEATING

Entering air temperature: + 20 °C
Water temperature: +65 °C E.W.T. +55 °C L.W.T.

MODEL		ALLEGRA-ECM 2.3-4T					ALLEGRA-ECM 4.3-4T					ALLEGRA-ECM 6.3-4T				
INVERTER SPEED SIGNAL (VDC)		1	3	5	7,5	10	1	3	5	7,5	10	1	3	5	7,5	10
		MIN		MED		MAX	MIN		MED		MAX	MIN		MED		MAX
Air flow	m^3/h	120	170	220	270	330	210	280	350	430	515	305	395	495	610	735
Cooling total emission	kW	0,73	0,97	1,18	1,37	1,59	1,41	1,80	2,18	2,57	2,95	1,96	2,44	2,93	3,44	3,96
Cooling sensible emission	kW	0,55	0,74	0,92	1,09	1,28	1,03	1,33	1,64	1,95	2,26	1,46	1,83	2,22	2,64	3,08
Heating emission	kW	0,71	0,91	1,08	1,24	1,43	1,29	1,57	1,85	2,13	2,41	1,76	2,10	2,45	2,83	3,22
Dp Cooling	kPa	2,3	3,8	5,4	7,2	9,4	7,3	11,5	16,0	21,6	28,1	6,4	9,6	13,2	17,7	23,3
Dp Heating	kPa	1,0	1,6	2,1	2,7	3,5	3,6	5,2	6,9	8,8	11,0	1,2	1,7	2,2	2,9	3,6
Fan	W	7,0	9,0	11,0	14,5	21,0	6,0	9,0	12,0	17,0	25,0	7,0	10,0	15,0	22,0	32,0
Sound power (Lw)	dB(A)	30	36	41	47	51	30	36	42	47	51	33	38	44	49	54
Sound pressure (Lp) (1)	dB(A)	21	27	32	38	42	21	27	33	38	42	24	29	35	40	45

MODEL		ALLEGRA-ECM 7.3-4T					ALLEGRA-ECM 9.3-4T				
INVERTER SPEED SIGNAL (VDC)		1	3	5	7,5	10	1	3	5	7,5	10
		MIN		MED		MAX	MIN		MED		MAX
Air flow	m^3/h	400	500	610	755	890	605	785	945	1175	1395
Cooling total emission	kW	2,60	3,13	3,68	4,36	4,94	3,45	4,22	4,82	5,60	6,26
Cooling sensible emission	kW	1,92	2,33	2,77	3,32	3,80	2,63	3,28	3,79	4,49	5,10
Heating emission	kW	2,33	2,72	3,12	3,63	4,06	2,99	3,58	4,05	4,69	5,24
Dp Cooling	kPa	9,7	13,8	18,4	24,8	31,8	8,9	12,7	16,1	21,1	25,9
Dp Heating	kPa	2,4	3,1	4,0	5,2	6,3	3,7	5,1	6,3	8,2	9,9
Fan	W	9,0	13,0	18,5	28,5	41,0	16,0 (2)	25,0	41,0 (2)	65,0	99,0 (2)
Sound power (Lw)	dB(A)	37	43	48	53	57	44	50	55	60	64
Sound pressure (Lp) (1)	dB(A)	28	34	39	44	48	35	41	46	51	55

(1) The sound pressure levels are 9 dB (A) lower than the sound power levels, apply to the reverberant field of a 100 m^3 room and a reverberation time of 0.5 sec.
(2) Motor absorption in Heating mode: MIN: 18 W / MED: 46 W / MAX: 111 W

LSV

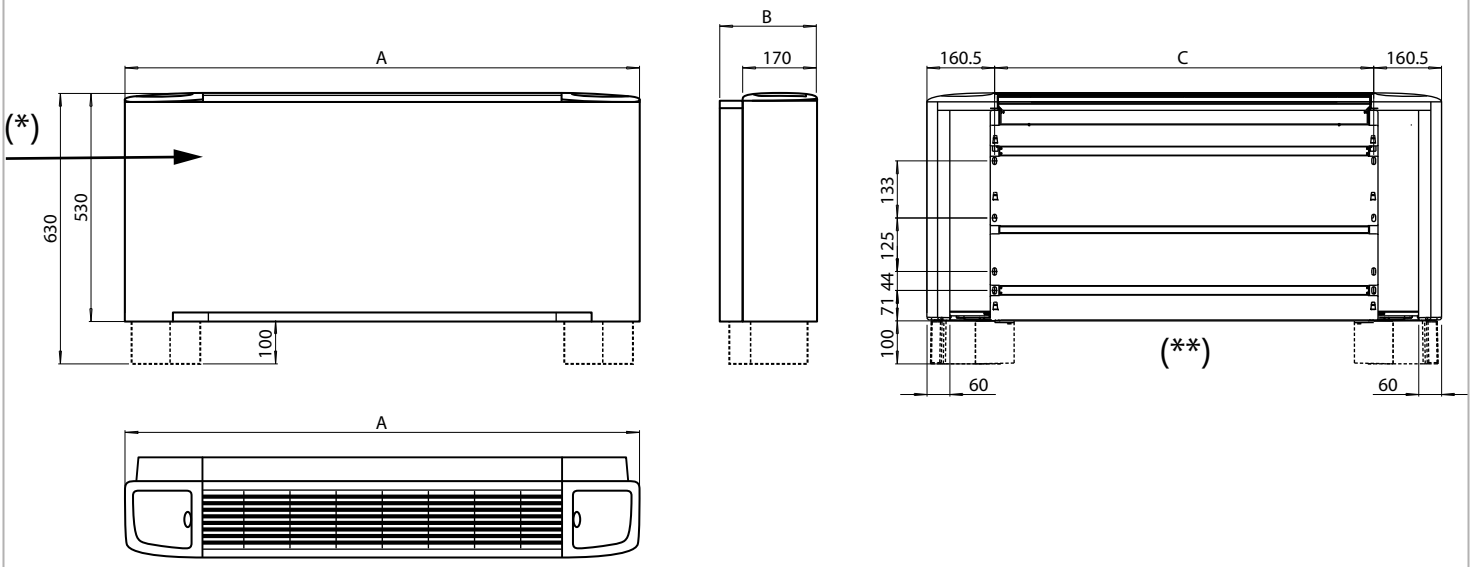

(*) Coil connections on the left
(**) Feet (optional)

LSH-LSB

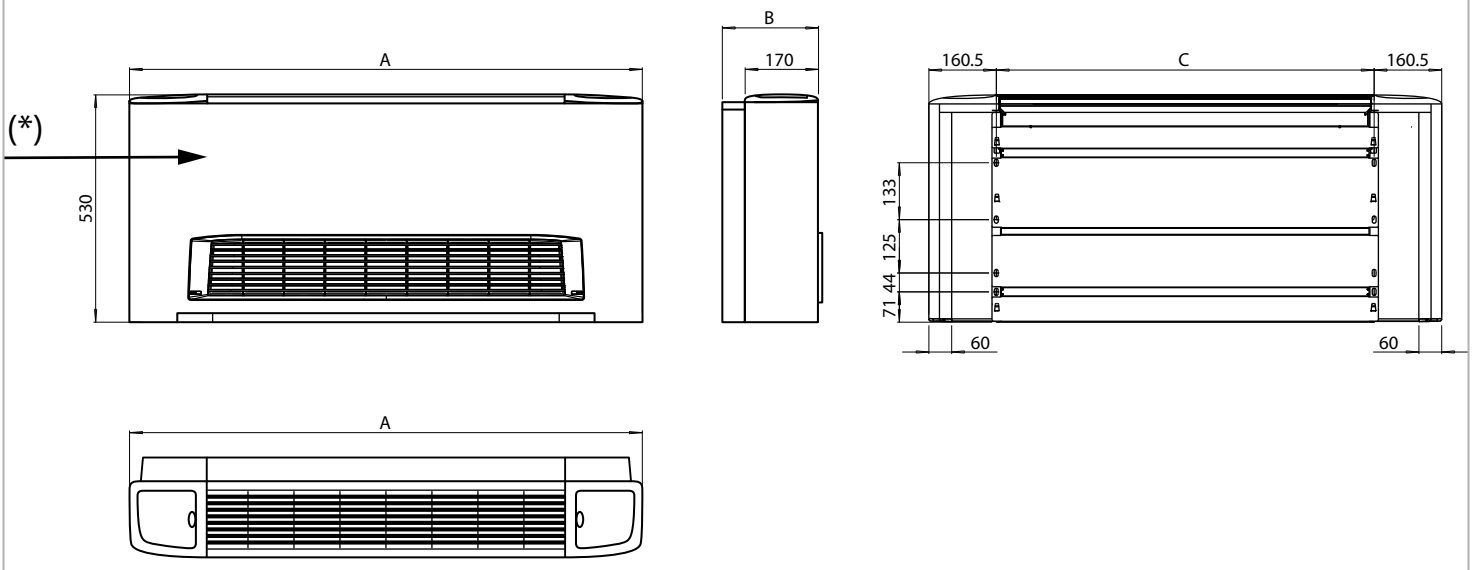

(*) Coil connections on the left

MODEL		ALLEGRA-ECM 2	ALLEGRA-ECM 4	ALLEGRA-ECM 6	ALLEGRA-ECM 7	ALLEGRA-ECM 9
A	mm	775	990	1205	1420	
B	mm	225				255
C	mm	454	669	884	1099	

PACKED UNIT

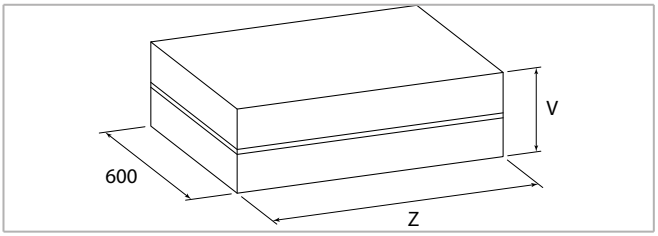

MODEL		2	4	6	7	9
V	mm	260				290
Z	mm	820	1035	1250	1465	

WEIGHT (KG)

Weight with packaging

MODEL	2	4	6	7	9
3 rows	17,2	22,5	27,7	32,1	35,9
3+1 rows	18,0	23,7	29,2	33,9	37,7
3+2 rows	18,6	24,4	30,1	35,0	38,8
4 rows	18,0	23,5	29,0	33,6	37,4
4+1 rows	18,8	24,7	30,5	35,4	39,2

Weight without packaging

MODEL	2	4	6	7	9
3 rows	15,4	20,2	24,9	28,8	32,2
3+1 rows	16,2	21,4	26,4	30,6	34,0
3+2 rows	16,8	22,1	27,3	31,7	35,1
4 rows	16,2	21,2	26,2	30,3	33,7
4+1 rows	17,0	22,4	27,7	32,1	35,5

LSN VERTICAL INSTALLATION

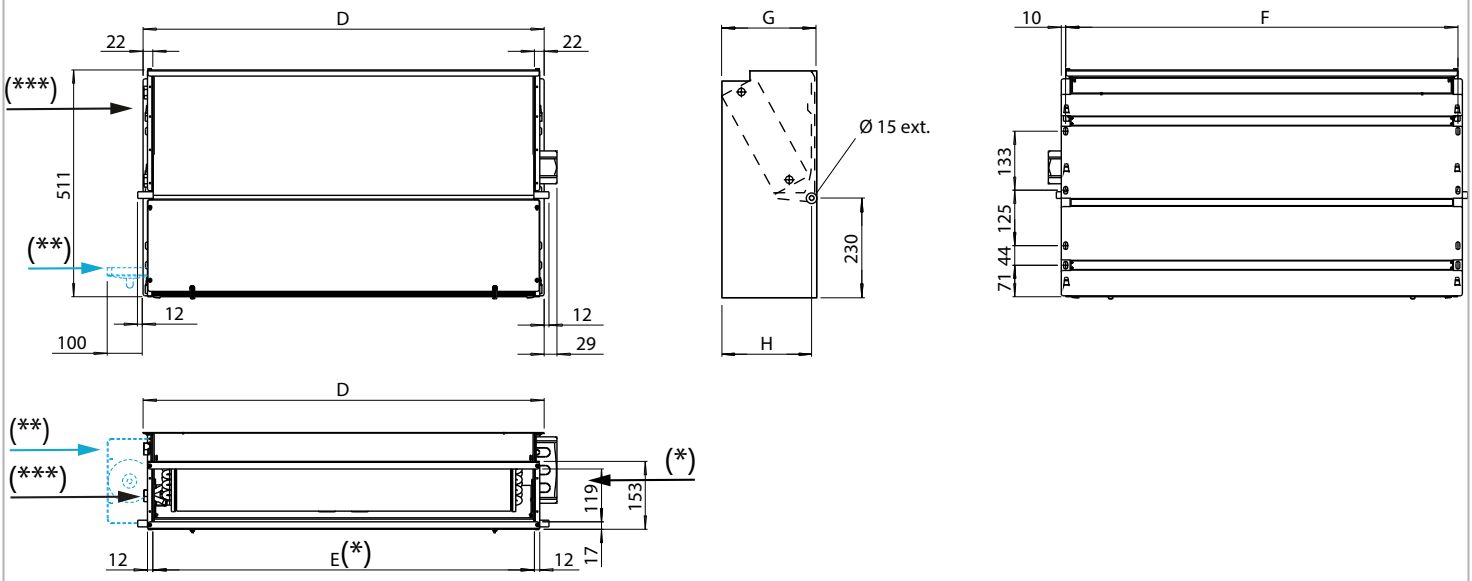

(*) = Supply frame dimension E x 119 mm
(**) = Auxiliary condensate tray (optional)
(***) = Coil connections on the left

LSN HORIZONTAL INSTALLATION

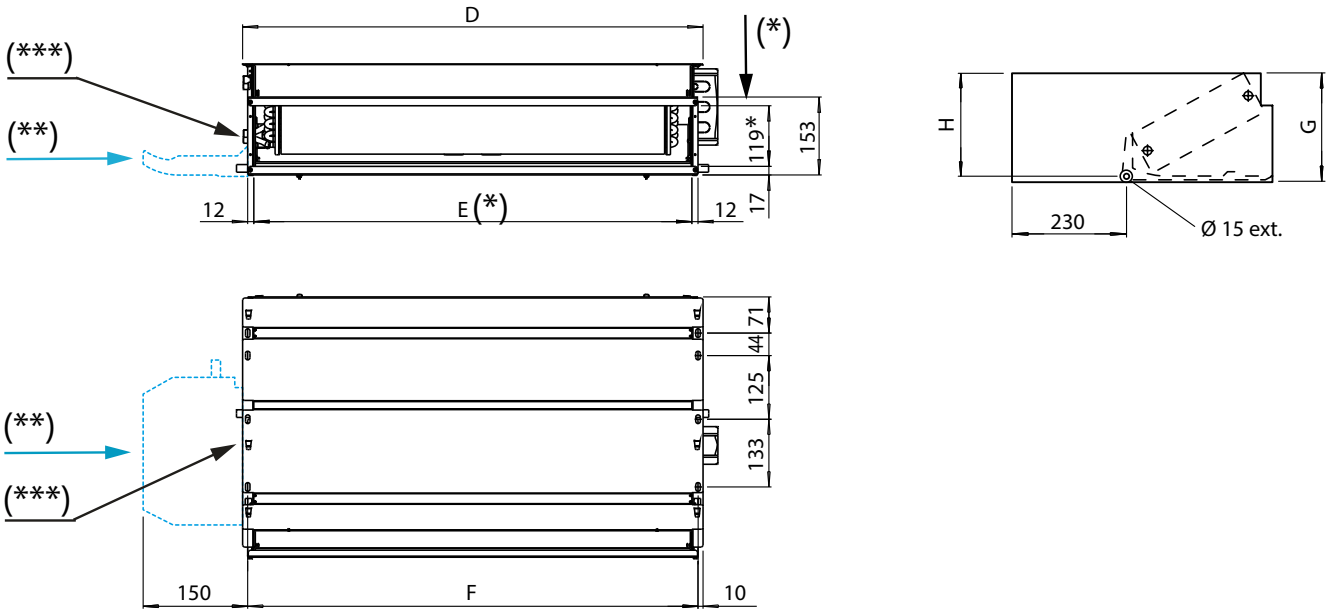

(*) = Supply frame dimension E x 119 mm
(**) = Auxiliary condensate tray (optional)
(***) = Coil connections on the left

MODEL		ALLEGRA-ECM 2	ALLEGRA-ECM 4	ALLEGRA-ECM 6	ALLEGRA-ECM 7	ALLEGRA-ECM 9
D	mm	474	689	904	1119	
E	mm	430	645	860	1075	
F	mm	454	669	884	1099	

PACKED UNIT

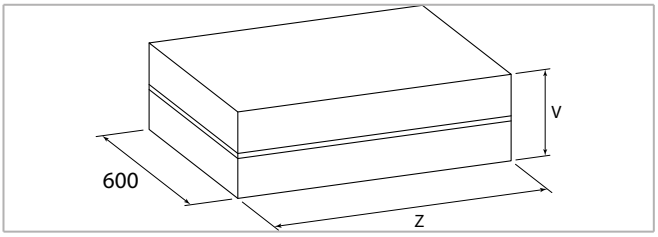

MODEL		2	4	6	7	9
V	mm	260				290
Z	mm	820		1035	1250	

WEIGHT (KG)

Weight with packaging

MODEL	2	4	6	7	9
3 rows	13,6	18,1	22,8	27,0	30,4
3+1 rows	14,4	19,3	24,3	28,8	32,2
3+2 rows	15,0	20,0	25,2	29,9	33,3
4 rows	14,4	19,1	24,1	28,5	31,9
4+1 rows	15,2	20,3	25,6	30,3	33,7

Weight without packaging

MODEL	2	4	6	7	9
3 rows	11,8	16,3	20,5	24,2	27,3
3+1 rows	12,6	17,5	22,0	26,0	29,1
3+2 rows	13,2	18,2	22,9	27,1	30,2
4 rows	12,6	17,3	21,8	25,7	28,8
4+1 rows	13,4	18,5	23,3	27,5	30,6

redge

NEXT LEVEL HVAC SOLUTIONS

redge

ARMONIA
ARMONIA ECM

Cassette Fan Coil Unit



CWC	2	EC	MB	EH	1	20
MODEL ARMOMIA ARMONIA ECM	**PIPE SYSTEM** 2 - 2 pipes 4 - 4 pipes	**MOTOR** -- - AC motor EC - ECM motor	**POWER BOARD** ST - Basic MB - MB board	**ACCESSORIES** -- - None EH - Electrical heater	**SIZE** 1 2 3 4 5 6 7 8	**COIL COMPOSITION** 20 - 2 Pipes 40 - 4 Pipes 60 - 4 Pipes (thicker coil for higher cooling emission)

AIR DIFFUSER

Intake grids, frame and adjustable air distribution louvers on each side, made from ABS.

Several Versions are available as options:

PLASTIC DIFFUSER - WHITE - NOT FITTED
PLASTIC DIFFUSER WITHOUT MOTORIZED FLAPS - WHITE - NOT FITTED
PLASTIC DIFFUSER WITH MOTORIZED FLAPS - WHITE - NOT FITTED
METALLIC DIFFUSER - WHITE - NOT FITTED
PLASTIC DIFFUSER IN DIFFERENT RAL COLOURS (Min. qty 20 pcs)
PLASTIC DIFFUSER IN DIFFERENT RAL COLOURS WITHOUT MOTORIZED FLAPS (Min. qty 20 pcs)
PLASTIC DIFFUSER IN DIFFERENT RAL COLOURS WITH MOTORIZED FLAPS (Min. qty 20 pcs)



600 X 600 VERSION



INNER CASING

It is made of galvanized steel with internal thermal insulation with polyolefin (PO) foam (B-s2-d0 EN 13501-01) and external anti-condensate lining.

CONTROL DEVICES

Made of an external box with the control electronic board with an easily accessible terminal board.

VALVE SET

Two or three way valves for ON/OFF operation, with pipe mounting kit and lockshields.

FAN ASSEMBLY

The fan assembly, which is mounted on anti-vibrating supports, is extremely silent.
The radial fan has been designed to optimise performance, using wing profile blades with a shape that reduces turbulence, increasing efficiency and reducing noise.
The motor is single phase 230 V / 50 Hz supply, class B insulation and integrated Klixon thermal contact for motor protection.
The units are supplied with 3 standard speeds connected and it is possible to change them on site if necessary.



COIL

Made of copper tubes with bonded aluminium fins for maximum transfer contact.
1, 2 or 3 row coil for 2 pipe models and 2+1 row coil for 4 pipe models (the heating row is on the inside part of the coil).
For 4 pipe systems two versions are available: the ARMONIA 0.4T, ARMONIA 1.4T, ARMONIA 2.4T, ARMONIA 3.4T, ARMONIA 4.4T, ARMONIA 5.4T, ARMONIA 6.4T serie supply an higher heating emission; and the ARMONIA 2.6T, ARMONIA 3.6T, ARMONIA 5.6T, ARMONIA 6.6T serie supply an higher cooling emission.
The coil is not suitable for use in corrosive atmosphere or in environments where aluminium may be subject to corrosion.



800 X 800 VERSION

CONDENSATE COLLECTION TRAY

High density ABS polystyrene foam condensate tray, shaped in order to optimize the air diffusion.
Fire retardant rating B1 to DIN 4102.

FILTER

Synthetic washable filter, easily removable.

CONDENSATE DRAIN PUMP

Float switch centrifugal pump with 650 mm of maximum head, integral to the unit and wired to the control panel on the outside of the casing.
The version with available pressure 1000 mm can be supplied on demand.

2 PIPE SYSTEM

The following standard rating conditions are used:

COOLING

Entering air temperature: + 27 °C d.b. + 19 °C w.b.
Water temperature: +7 °C E.W.T. +12 °C L.W.T.

HEATING

Entering air temperature: + 20 °C
Water temperature: +45 °C E.W.T. +40 °C L.W.T.

MODEL		ARMONIA 0.2T			ARMONIA 1.2T			ARMONIA 2.2T			ARMONIA 3.2T		
SPEED		1	2	3	1	2	3	1	2	3	1	2	3
Air flow	m^3/h	310	420	610	310	420	520	320	500	710	430	610	880
Cooling total emission	kW	1,25	1,60	1,92	1,82	2,31	2,64	2,23	3,30	4,26	2,91	3,82	4,93
Cooling sensible emission	kW	0,99	1,29	1,58	1,33	1,72	2,00	1,55	2,35	3,11	2,05	2,75	3,65
Heating emission	kW	1,38	1,80	2,24	1,85	2,42	2,80	2,12	3,28	4,37	2,85	3,85	5,15
Dp Cooling	kPa	4,5	7,0	10,0	4,9	7,6	9,7	6,4	13,0	20,9	7,5	12,4	19,7
Dp Heating	kPa	4,4	7,2	10,7	4,3	6,9	9,0	2,8	6,1	10,2	6,2	10,6	17,8
Sound power (Lw)	dB(A)	33	40	49	33	40	45	33	45	53	41	49	59
Sound pressure (Lp) (1)	dB(A)	24	31	40	24	31	36	24	36	44	32	40	50
Fan	W	25	32	57	25	32	44	25	44	68	32	57	90
Current absorbed	A	0,11	0,15	0,27	0,11	0,15	0,20	0,11	0,20	0,32	0,15	0,27	0,45
Condensate drain pump power absorption	W	10	10	10	10	10	10	10	10	10	10	10	10
Water content	l	0,8	0,8	0,8	1,4	1,4	1,4	2,1	2,1	2,1	2,1	2,1	2,1
Length	mm	575	575	575	575	575	575	575	575	575	575	575	575
Depth	mm	575	575	575	575	575	575	575	575	575	575	575	575
Height	mm	275	275	275	275	275	275	275	275	275	275	275	275

MODEL		ARMONIA 4.2T			ARMONIA 5.2T			ARMONIA 6.2T		
SPEED		1	2	3	1	2	3	1	2	3
Air flow	m^3/h	630	820	1140	710	970	1500	710	1280	1820
Cooling total emission	kW	4,18	4,86	6,08	5,27	6,72	9,39	5,27	8,36	10,93
Cooling sensible emission	kW	3,00	3,53	4,51	3,42	4,42	6,36	3,67	6,00	8,08
Heating emission	kW	4,27	5,03	6,50	4,92	6,40	9,23	5,12	8,55	11,72
Dp Cooling	kPa	10,9	14,3	21,6	9,4	14,7	26,9	9,4	21,8	35,6
Dp Heating	kPa	7,0	9,4	15,0	7,1	11,4	22,0	7,6	19,2	33,8
Sound power (Lw)	dB(A)	33	40	48	34	40	53	34	48	58
Sound pressure (Lp) (1)	dB(A)	24	31	39	25	31	44	25	39	49
Fan	W	33	48	77	42	63	120	42	95	170
Current absorbed	A	0,15	0,23	0,36	0,18	0,28	0,53	0,18	0,42	0,74
Condensate drain pump power absorption	W	10	10	10	10	10	10	10	10	10
Water content	l	3,0	3,0	3,0	4,0	4,0	4,0	4,0	4,0	4,0
Length	mm	820	820	820	820	820	820	820	820	820
Depth	mm	820	820	820	820	820	820	820	820	820
Height	mm	303	303	303	303	303	303	303	303	303

(1) The sound pressure levels are 9 dB (A) lower than the sound power levels, apply to the reverberant field of a 100 m^3 room and a reverberation time of 0.5 sec.

4 PIPE SYSTEM

The following standard rating conditions are used:

COOLING

Entering air temperature: + 27 °C d.b. + 19 °C w.b.
Water temperature: +7 °C E.W.T. +12 °C L.W.T.

HEATING

Entering air temperature: + 20 °C
Water temperature: +65 °C E.W.T. +55 °C L.W.T.

MODEL		ARMONIA 0.4T			ARMONIA 1.4T			ARMONIA 2.4T			ARMONIA 2.6T			ARMONIA 3.4T			ARMONIA 3.6T		
SPEED		1	2	3	1	2	3	1	2	3	1	2	3	1	2	3	1	2	3
Air flow	m^3/h	310	420	610	310	420	520	320	500	710	320	500	710	430	610	880	430	610	880
Cooling total emission	kW	1,49	1,93	2,27	1,83	2,33	2,66	1,83	2,61	3,27	2,07	3,02	3,86	2,33	2,96	3,72	2,69	3,47	4,44
Cooling sensible emission	kW	1,13	1,52	1,84	1,32	1,68	1,94	1,32	1,94	2,49	1,47	2,20	2,88	1,72	2,23	2,88	1,94	2,56	3,37
Heating emission	kW	1,72	2,23	2,66	2,13	2,66	3,04	2,13	3,04	3,86	1,73	2,71	2,91	2,61	3,33	4,19	2,14	2,66	3,29
Dp Cooling	kPa	6,0	10,0	13,5	4,6	6,9	8,8	4,6	8,8	13,4	4,0	7,0	10,5	7,2	11,2	17,0	6,0	9,0	14,0
Dp Heating	kPa	5,2	8,3	11,4	4,6	6,8	8,7	4,6	8,7	13,3	2,6	4,6	6,7	6,4	9,9	15,0	3,9	5,7	8,4
Sound power (Lw)	dB(A)	33	40	49	33	40	45	33	45	53	33	45	53	41	49	59	41	49	59
Sound pressure (Lp) [1]	dB(A)	24	31	40	24	31	36	24	36	44	24	36	44	32	40	50	32	40	50
Fan	W	25	32	57	25	32	44	25	44	68	25	44	68	32	57	90	32	57	90
Current absorbed	A	0,11	0,15	0,27	0,11	0,15	0,20	0,11	0,20	0,32	0,11	0,20	0,32	0,15	0,27	0,45	0,15	0,27	0,45
Condensate drain pump power absorption	W	10	10	10	10	10	10	10	10	10	10	10	10	10	10	10	10	10	10
Cooling water content	l	1,0	1,0	1,0	1,4	1,4	1,4	1,4	1,4	1,4	1,7	1,7	1,7	1,4	1,4	1,4	1,7	1,7	1,7
Heating water content	l	0,6	0,6	0,6	0,7	0,7	0,7	0,7	0,7	0,7	0,5	0,5	0,5	0,7	0,7	0,7	0,5	0,5	0,5
Length	mm	575	575	575	575	575	575	575	575	575	575	575	575	575	575	575	575	575	575
Depth	mm	575	575	575	575	575	575	575	575	575	575	575	575	575	575	575	575	575	575
Height	mm	275	275	275	275	275	275	275	275	275	275	275	275	275	275	275	275	275	275

MODEL		ARMONIA 4.4T			ARMONIA 5.4T			ARMONIA 5.6T			ARMONIA 6.4T			ARMONIA 6.6T		
SPEED		1	2	3	1	2	3	1	2	3	1	2	3	1	2	3
Air flow	m^3/h	630	820	1140	710	970	1500	710	970	1500	710	1280	1820	710	1280	1820
Cooling total emission	kW	4,11	4,98	6,26	4,48	5,60	7,59	4,95	6,27	8,65	4,48	6,84	8,72	4,95	7,75	10,03
Cooling sensible emission	kW	2,93	3,60	4,61	3,21	4,09	5,71	3,49	4,49	6,37	3,21	5,09	6,67	3,49	5,64	7,51
Heating emission	kW	5,21	6,33	8,02	5,69	7,15	9,66	4,59	5,63	7,50	5,69	8,80	11,16	4,59	6,78	8,58
Dp Cooling	kPa	8,8	12,5	18,9	10,3	15,4	26,9	9,0	14,0	25,0	10,3	22,1	34,7	9,0	20,0	32,0
Dp Heating	kPa	7,9	11,2	17,2	9,3	14,0	24,0	4,9	7,0	11,8	9,3	20,3	31,2	4,9	9,9	15,0
Sound power (Lw)	dB(A)	33	40	48	34	40	53	34	40	53	34	48	58	34	48	58
Sound pressure (Lp) [1]	dB(A)	24	31	39	25	31	44	25	31	44	25	39	49	25	39	49
Fan	W	33	48	77	42	63	120	42	63	120	42	95	170	42	95	170
Current absorbed	A	0,15	0,23	0,36	0,18	0,28	0,53	0,18	0,28	0,53	0,18	0,42	0,74	0,18	0,42	0,74
Condensate drain pump power absorption	W	10	10	10	10	10	10	10	10	10	10	10	10	10	10	10
Cooling water content	l	3,0	3,0	3,0	3,0	3,0	3,0	3,6	3,6	3,6	3,0	3,0	3,0	3,6	3,6	3,6
Heating water content	l	1,4	1,4	1,4	1,4	1,4	1,4	1,0	1,0	1,0	1,4	1,4	1,4	1,1	1,1	1,1
Length	mm	820	820	820	820	820	820	820	820	820	820	820	820	820	820	820
Depth	mm	820	820	820	820	820	820	820	820	820	820	820	820	820	820	820
Height	mm	303	303	303	303	303	303	303	303	303	303	303	303	303	303	303

[1] The sound pressure levels are 9 dB (A) lower than the sound power levels, apply to the reverberant field of a 100 m^3 room and a reverberation time of 0.5 sec.

ARMONIA 0.2T-0.4T / ARMONIA 1.2T-1.4T / ARMONIA 2.2T-2.4T-2.6T / ARMONIA 3.2T-3.4T-3.6T (600 X 600 VERSION)

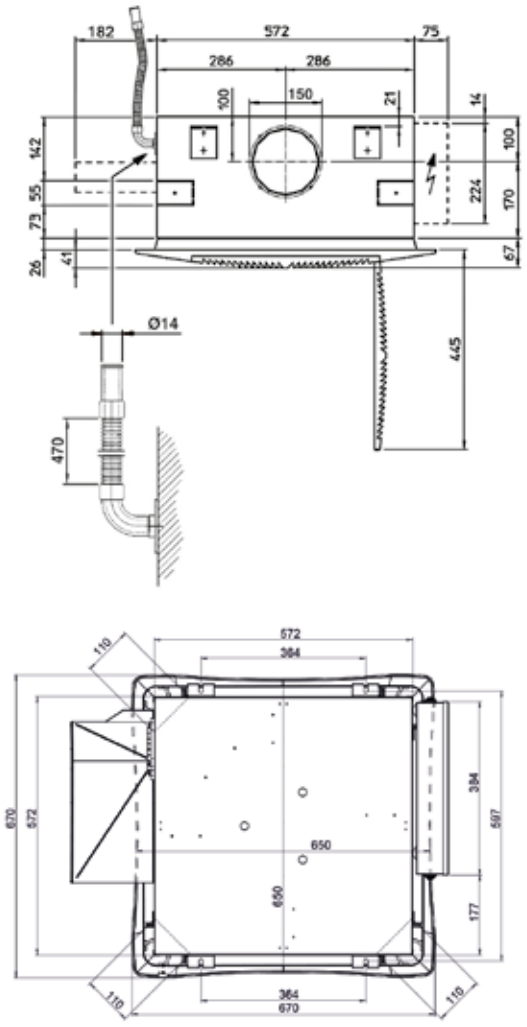

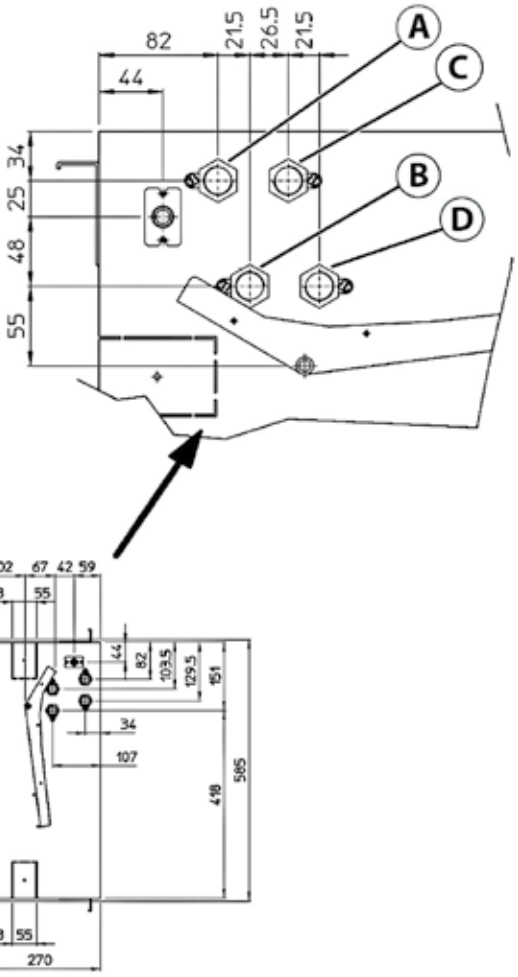

2 pipe unit
A Hot/cold water inlet 1/2"
B Return, heating/cooling 1/2"

4 pipe unit
A Flow, cooling 1/2"
B Return, cooling 1/2"
C Hot water inlet 1/2"
D Hot water outlet 1/2"

PACKED UNIT

UNIT

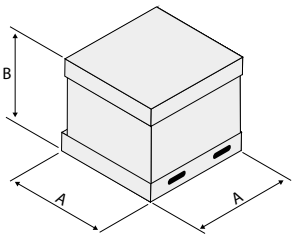

A = 790 mm **B** = 350 mm

WEIGHT/MODEL		0.2T-1.2T	0.4T-1.4T	2.2T-2.4T-2.6T	3.2T-3.4T-3.6T
With packaging	kg	21,0	22,5	22,0	
Without packaging	kg	18,0	19,5	19,0	

DIFFUSER

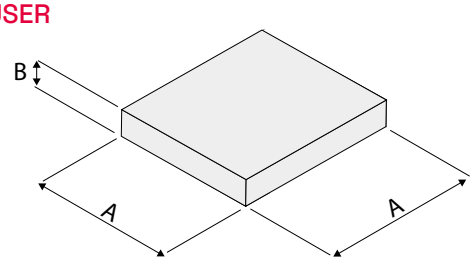

A = 750 mm **B** = 150 mm

WEIGHT/MODEL		0.2T-1.2T	0.4T-1.4T	2.2T-2.4T-2.6T	3.2T-3.4T-3.6T
With packaging	kg	3,5			
Without packaging	kg	2,5			

ARMONIA 4.2T-4.4T / ARMONIA 5.2T-5.4T-5.6T / ARMONIA 6.2T-6.4T-6.6T (800 X 800 VERSION)

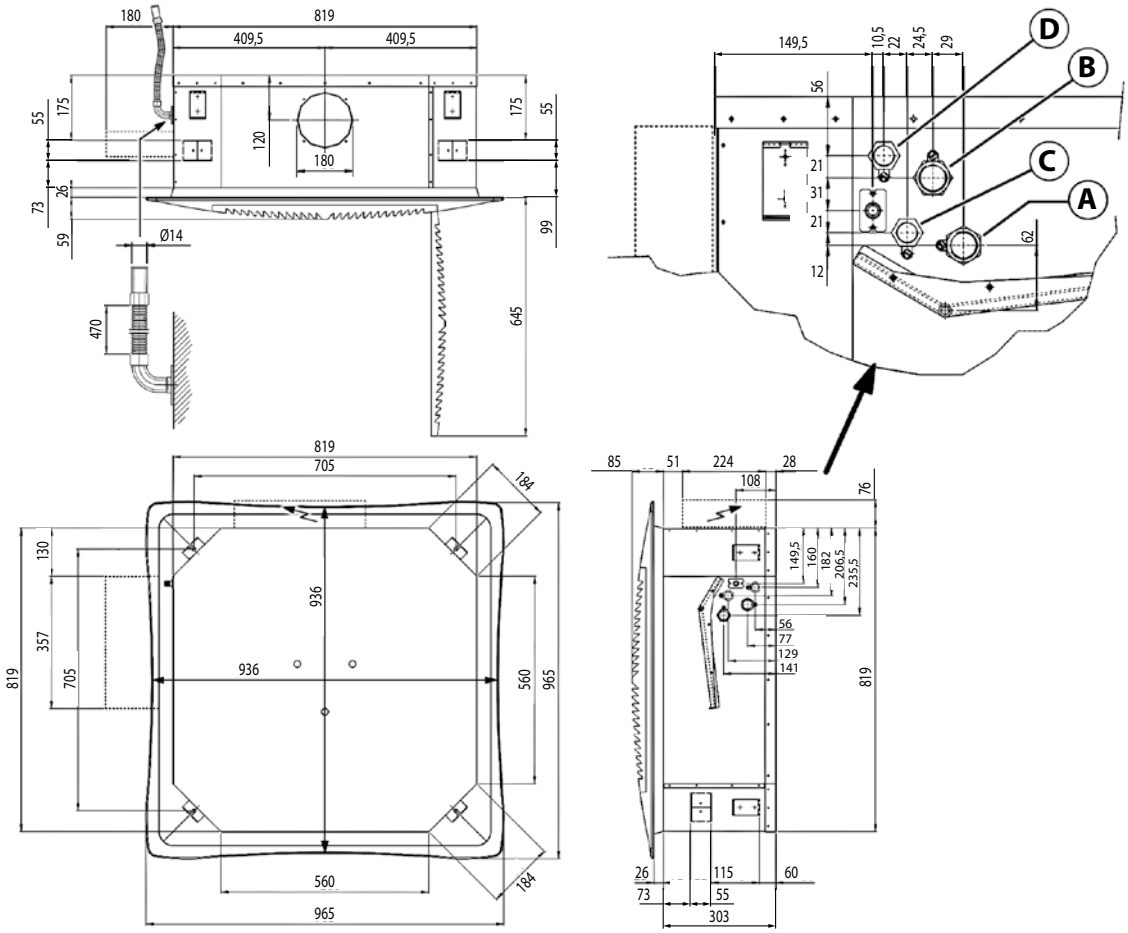

2 pipe unit
- **A** Hot/cold water inlet 3/4"
- **B** Hot/cold water outlet 3/4"

4 pipe unit
- **A** Col water inlet 3/4"
- **B** Cold water outlet 3/4"
- **C** Hot water inlet 1/2"
- **D** Hot water outlet 1/2"

PACKED UNIT

UNIT

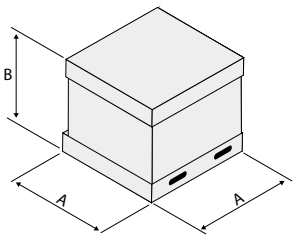

- **A** = 1050 mm
- **B** = 400 mm

DIFFUSER

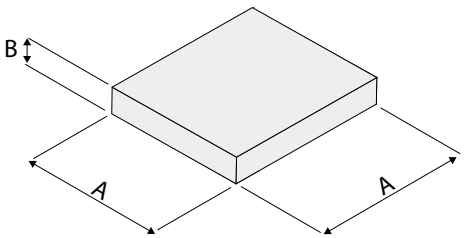

- **A** = 1000 mm
- **B** = 200 mm

WEIGHT/MODEL		4.2T	4.4T	5.2T-5.4T-5.6T	6.2T-6.4T-6.6T
With packaging	kg	40	44		
Without packaging	kg	35	39		

WEIGHT/MODEL		4.2T	4.4T	5.2T-5.4T-5.6T	6.2T-6.4T-6.6T
With packaging	kg	7,0			
Without packaging	kg	5,5			

METAL AIR INLET GRID MD 600 / MD 800

(RS receiver, Code 9066338, for metal diffuser for MB units)
Not suitable with electronic electrostatic filter.

MODEL	CODE
MD-600	9079420
MD-800	9079417

MD-600

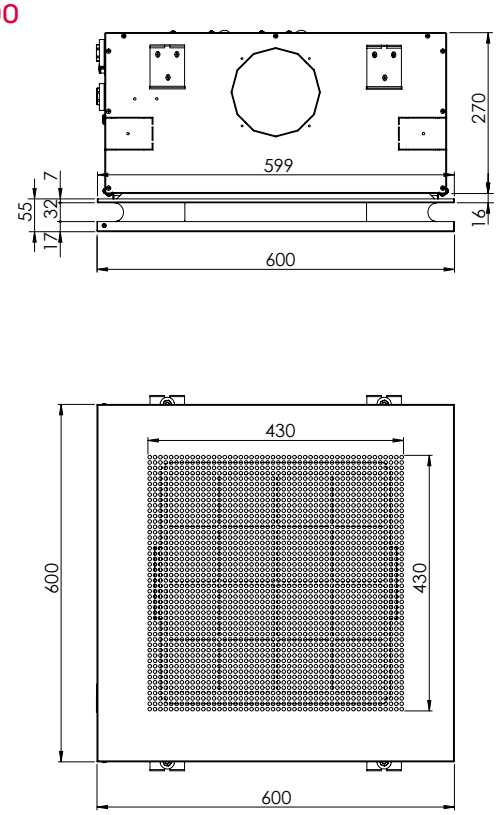

MD-800

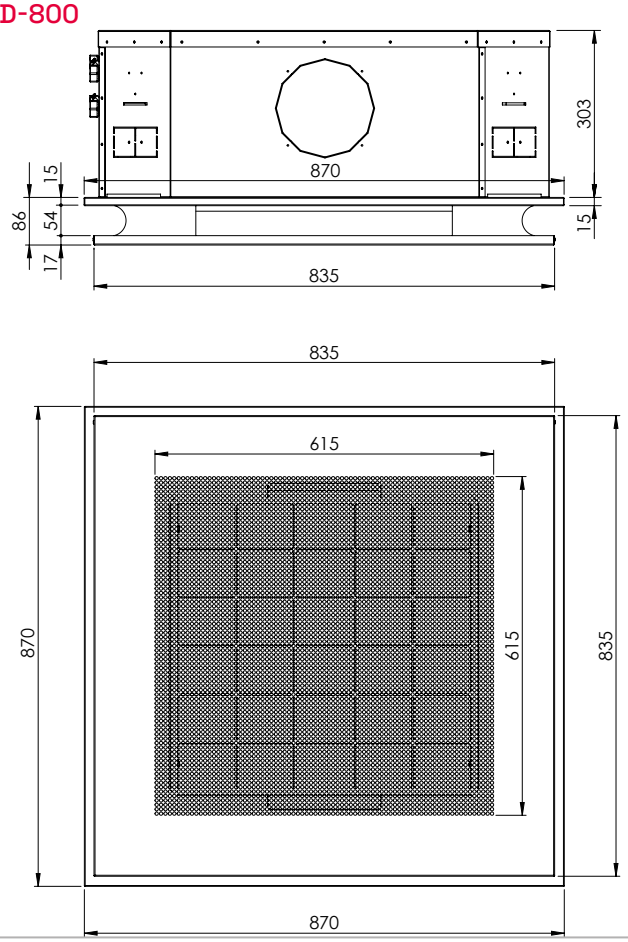

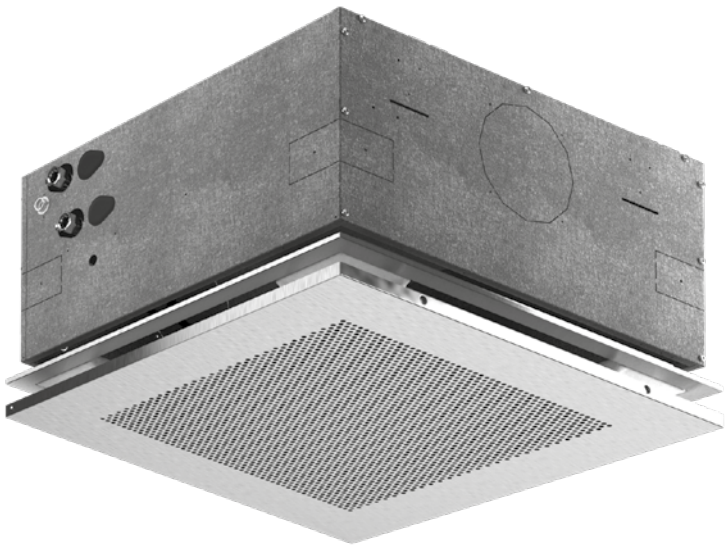

2 PIPE SYSTEM

The following standard rating conditions are used:

COOLING

Entering air temperature: + 27 °C d.b. + 19 °C w.b.
Water temperature: +7 °C E.W.T. +12 °C L.W.T.

HEATING

Entering air temperature: + 20 °C
Water temperature: +45 °C E.W.T. +40 °C L.W.T.

MODEL		ARMONIA-ECM 1.2T					ARMONIA-ECM 2.2T					ARMONIA-ECM 3.2T				
INVERTER SPEED SIGNAL (VDC)		1	3	5	7,5	10	1	3	5	7,5	10	1	3	5	7,5	10
Air flow	m^3/h	310	345	380	457	535	310	377	445	577	710	360	485	610	745	880
Cooling total emission	kW	1,84	2,01	2,16	2,47	2,73	2,24	2,65	3,04	3,71	4,30	2,55	3,25	3,85	4,45	4,96
Cooling sensible emission	kW	1,35	1,47	1,60	1,84	2,07	1,57	1,87	2,16	2,67	3,15	1,80	2,31	2,79	3,25	3,68
Heating emission	kW	1,85	2,04	2,22	2,55	2,87	2,12	2,56	2,98	3,68	4,36	2,46	3,17	3,85	4,52	5,15
Dp Cooling	kPa	4,9	5,8	6,6	8,4	10,1	4,6	6,3	9,4	11,6	15,1	5,9	9,1	12,4	16,2	19,7
Dp Heating	kPa	4,3	5,1	5,9	7,6	9,4	3,6	5,1	6,6	9,7	13,2	4,7	7,5	10,6	14,1	17,8
Sound power (Lw)	dB(A)	33,0	36,0	39,0	43,0	47,0	33,0	38,0	43,0	48,5	54,0	37,0	43,5	50,0	55,0	60,0
Sound pressure (Lp) (1)	dB(A)	24,0	27,0	30,0	34,0	38,0	24,0	29,0	34,0	39,5	45,0	28,0	34,5	41,0	46,0	51,0
Fan	W	5,0	6,5	8,0	12,0	16,0	5,0	8,0	11,0	21,0	31,0	7,0	14,0	21,0	41,5	62,0
Condensate drain pump power absorption	W	10	10	10	10	10	10	10	10	10	10	10	10	10	10	10
Water content	l	1,4	1,4	1,4	1,4	1,4	2,1	2,1	2,1	2,1	2,1	2,1	2,1	2,1	2,1	2,1
Length	mm	575	575	575	575	575	575	575	575	575	575	575	575	575	575	575
Depth	mm	575	575	575	575	575	575	575	575	575	575	575	575	575	575	575
Height	mm	275	275	275	275	275	275	275	275	275	275	275	275	275	275	275

MODEL		ARMONIA-ECM 4.2T					ARMONIA-ECM 5.2T				
INVERTER SPEED SIGNAL (VDC)		1	3	5	7,5	10	1	3	5	7,5	10
Air flow	m^3/h	630	750	870	1017	1165	710	920	1130	1450	1770
Cooling total emission	kW	4,20	4,70	5,13	5,76	6,30	5,28	6,54	7,69	9,28	10,69
Cooling sensible emission	kW	3,02	3,39	3,75	4,23	4,69	3,68	4,62	5,50	6,71	7,83
Heating emission	kW	4,27	4,78	5,30	6,02	6,70	4,90	6,18	7,34	9,00	10,56
Dp Cooling	kPa	10,9	13,3	15,6	19,3	22,7	9,4	13,8	18,5	26,1	33,0
Dp Heating	kPa	9,6	11,8	14,2	17,9	21,6	7,0	10,7	14,6	21,1	28,1
Sound power (Lw)	dB(A)	33,0	36,0	39,0	43,5	48,0	34,0	40,5	47,0	52,0	57,0
Sound pressure (Lp) (1)	dB(A)	24,0	27,0	30,0	34,5	39,0	25,0	31,5	38,0	43,0	48,0
Fan	W	10,0	13,5	17,0	25,0	33,0	10,0	21,0	32,0	70,0	108,0
Condensate drain pump power absorption	W	10	10	10	10	10	10	10	10	10	10
Water content	l	3,0	3,0	3,0	3,0	3,0	4,0	4,0	4,0	4,0	4,0
Length	mm	820	820	820	820	820	820	820	820	820	820
Depth	mm	820	820	820	820	820	820	820	820	820	820
Height	mm	303	303	303	303	303	303	303	303	303	303

(1) The sound pressure levels are 9 dB (A) lower than the sound power levels, apply to the reverberant field of a 100 m^3 room and a reverberation time of 0.5 sec.

4 PIPE SYSTEM

The following standard rating conditions are used:

COOLING

Entering air temperature: + 27 °C d.b. + 19 °C w.b.
Water temperature: +7 °C E.W.T. +12 °C L.W.T.

HEATING

Entering air temperature: + 20 °C
Water temperature: +65 °C E.W.T. +55 °C L.W.T.

MODEL		ARMONIA-ECM 1.4T					ARMONIA-ECM 2.6T					ARMONIA-ECM 3.6T				
INVERTER SPEED SIGNAL (VDC)		1	3	5	7,5	10	1	3	5	7,5	10	1	3	5	7,5	10
Air flow	m^3/h	310	345	380	457	535	310	377	445	577	710	360	485	610	745	880
Cooling total emission	kW	1,85	2,02	2,17	2,48	2,75	2,09	2,46	2,81	3,39	3,90	2,37	2,99	3,51	4,03	4,47
Cooling sensible emission	kW	1,34	1,31	1,59	1,64	2,06	1,49	1,76	2,03	2,49	2,92	1,70	2,17	2,60	3,01	3,40
Heating emission	kW	2,13	2,32	2,51	2,85	3,18	1,73	1,97	2,20	2,57	2,91	1,92	2,31	2,66	2,99	3,29
Dp Cooling	kPa	4,6	5,4	6,2	7,9	9,5	3,3	4,4	5,6	7,9	10,3	4,1	6,3	8,4	10,9	13,1
Dp Heating	kPa	4,6	5,3	6,1	7,7	9,4	2,6	3,3	4,1	5,4	6,7	3,2	4,4	5,7	7,1	8,4
Sound power (Lw)	dB(A)	33,0	36,0	39,0	43,0	47,0	33,0	38,0	43,0	48,5	54,0	37,0	43,5	50,0	55,0	60,0
Sound pressure (Lp) (1)	dB(A)	24,0	27,0	30,0	34,0	38,0	24,0	29,0	34,0	39,5	45,0	28,0	34,5	41,0	46,0	51,0
Fan	W	5,0	6,5	8,0	12,0	16,0	5,0	8,0	11,0	21,0	31,0	7,0	14,0	21,0	41,5	62,0
Condensate drain pump power absorption	W	10	10	10	10	10	10	10	10	10	10	10	10	10	10	10
Cooling water content	l	1,4	1,4	1,4	1,4	1,4	1,7	1,7	1,7	1,7	1,7	1,7	1,7	1,7	1,7	1,7
Heating water content	l	0,7	0,7	0,7	0,7	0,7	0,5	0,5	0,5	0,5	0,5	0,5	0,5	0,5	0,5	0,5
Length	mm	575	575	575	575	575	575	575	575	575	575	575	575	575	575	575
Depth	mm	575	575	575	575	575	575	575	575	575	575	575	575	575	575	575
Height	mm	275	275	275	275	275	275	275	275	275	275	275	275	275	275	275

MODEL		ARMONIA-ECM 4.4T					ARMONIA-ECM 5.6T				
INVERTER SPEED SIGNAL (VDC)		1	3	5	7,5	10	1	3	5	7,5	10
Air flow	m^3/h	630	750	870	1017	1165	710	920	1130	1450	1770
Cooling total emission	kW	4,29	4,81	5,29	5,92	6,48	4,97	6,13	7,14	8,56	9,76
Cooling sensible emission	kW	3,07	3,46	3,82	4,32	4,80	3,51	4,37	5,17	6,27	7,29
Heating emission	kW	5,41	6,04	6,65	7,46	8,24	4,58	5,47	6,27	7,36	8,33
Dp Cooling	kPa	9,4	11,6	13,6	16,8	19,8	8,8	12,9	17,0	23,7	30,1
Dp Heating	kPa	8,5	10,3	12,3	15,1	18,1	4,9	6,7	8,6	11,4	14,3
Sound power (Lw)	dB(A)	33,0	36,0	39,0	43,5	48,0	34,0	40,5	47,0	52,0	57,0
Sound pressure (Lp) (1)	dB(A)	24,0	27,0	30,0	34,5	39,0	25,0	31,5	38,0	43,0	48,0
Fan	W	10,0	13,5	17,0	25,0	33,0	10,0	21,0	32,0	70,0	108,0
Condensate drain pump power absorption	W	10	10	10	10	10	10	10	10	10	10
Cooling water content	l	3,0	3,0	3,0	3,0	3,0	3,6	3,6	3,6	3,6	3,6
Heating water content	l	1,4	1,4	1,4	1,4	1,4	1,1	1,1	1,1	1,1	1,1
Length	mm	820	820	820	820	820	820	820	820	820	820
Depth	mm	820	820	820	820	820	820	820	820	820	820
Height	mm	303	303	303	303	303	303	303	303	303	303

(1) The sound pressure levels are 9 dB (A) lower than the sound power levels, apply to the reverberant field of a 100 m^3 room and a reverberation time of 0.5 sec.

ARMONIA-ECM 1.2T-1.4T / ARMONIA-ECM 2.2T-2.6T / ARMONIA-ECM 3.2T-3.6T (600 X 600 VERSION)

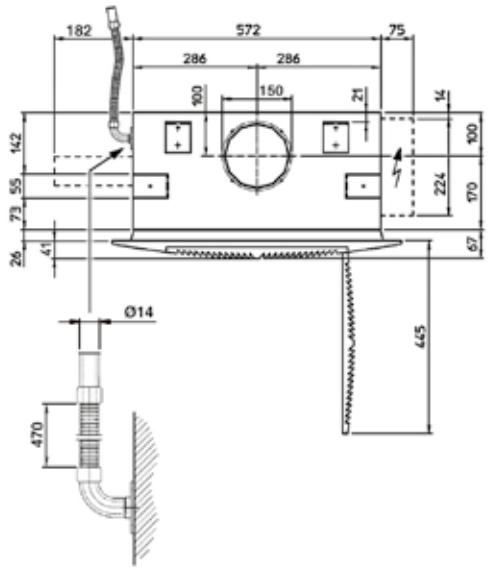

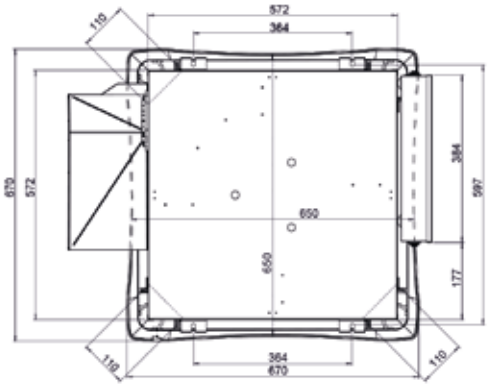

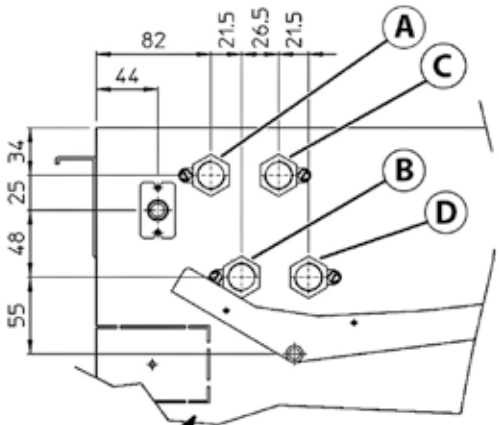

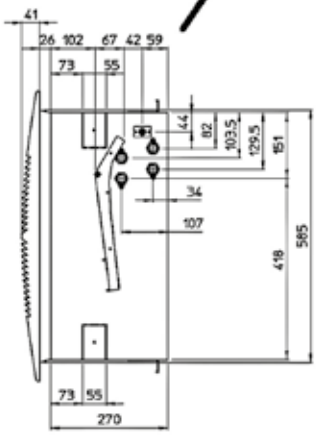

2 pipe unit
A Hot/cold water inlet 1/2"
B Return, heating/cooling 1/2"

4 pipe unit
A Flow, cooling 1/2"
B Return, cooling 1/2"
C Hot water inlet 1/2"
D Hot water outlet 1/2"

PACKED UNIT

UNIT

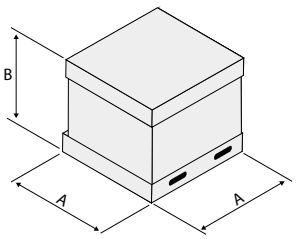

A = 790 mm
B = 350 mm

DIFFUSER

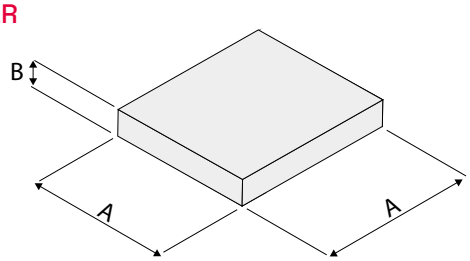

A = 750 mm
B = 150 mm

WEIGHT/MODEL		1.2T	1.4T	2.2T-2.6T	3.2T-3.6T
With packaging	kg	20,0	22,0	21,5	21,0
Without packaging	kg	17,0	19,0	18,5	18,0

WEIGHT/MODEL		1.2T	1.4T	2.2T-2.6T	3.2T-3.6T
With packaging	kg	3,5			
Without packaging	kg	2,5			

ARMONIA-ECM 4.2T-4.4T / ARMONIA-ECM 5.2T-5.6T (800 X 800 VERSION)

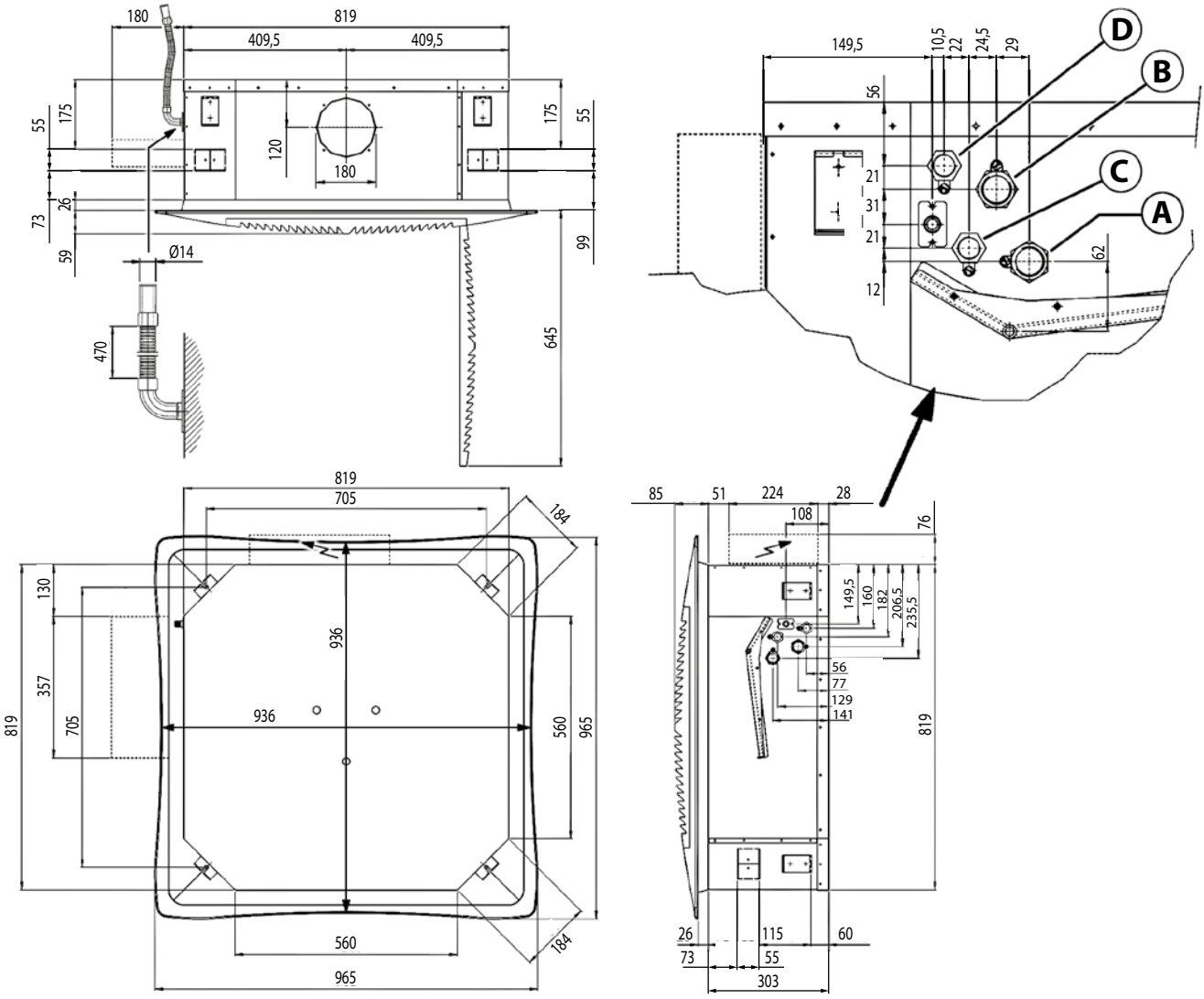

2 pipe unit
- **A** Hot/cold water inlet 3/4"
- **B** Hot/cold water outlet 3/4"

4 pipe unit
- **A** Col water inlet 3/4"
- **B** Cold water outlet 3/4"
- **C** Hot water inlet 1/2"
- **D** Hot water outlet 1/2"

PACKED UNIT

UNIT

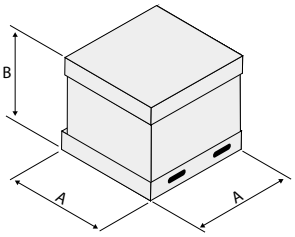

- **A** = 1050 mm
- **B** = 400 mm

DIFFUSER

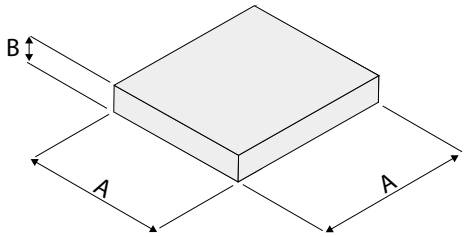

- **A** = 1000 mm
- **B** = 200 mm

WEIGHT/MODEL		4.2T	4.4T	5.2T-5.6T
With packaging	kg	35	40	
Without packaging	kg	31	35	

WEIGHT/MODEL		4.2T	4.4T	5.2T-5.6T
With packaging	kg	7,0		
Without packaging	kg	5,5		

METAL AIR INLET GRID MD 600 / MD 800

(RS receiver, Code 9066338, for metal diffuser for MB units)
Not suitable with electronic electrostatic filter.

MODEL	CODE
MD-600	9079420
MD-800	9079417

MD-600

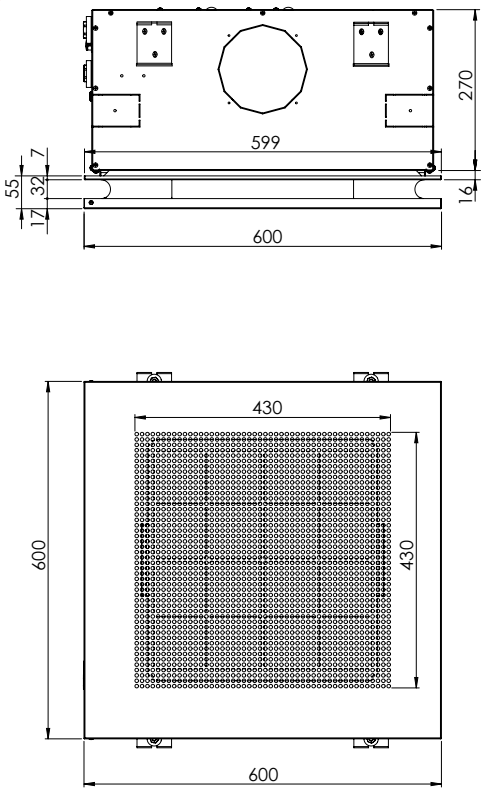

MD-800

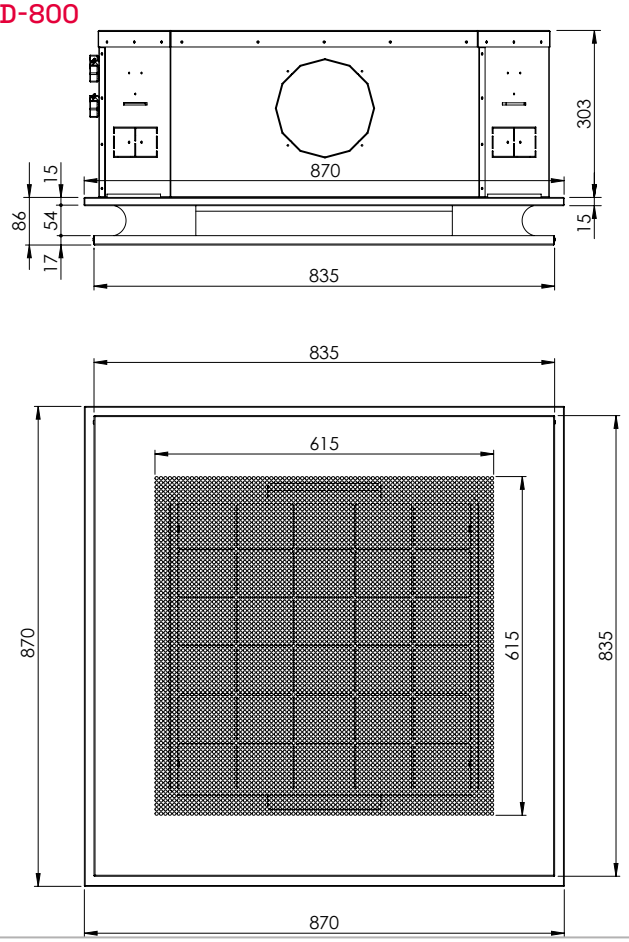

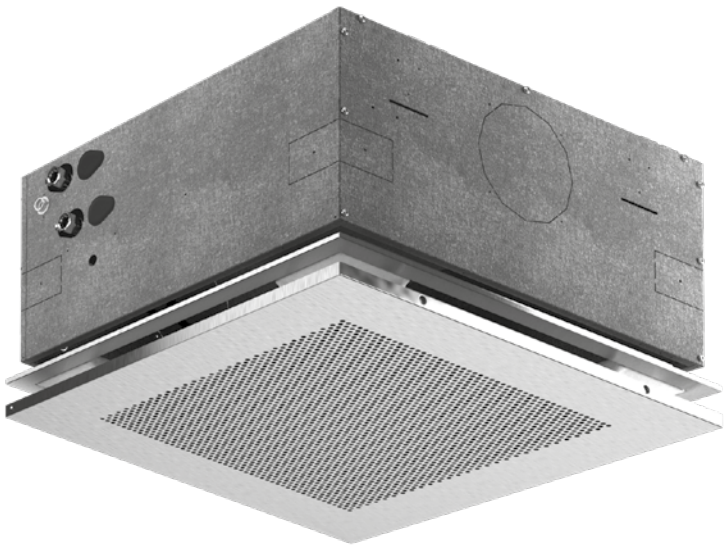

ARMONIA-ECM 7.2T-7.6T / ARMONIA-ECM 8.2T-8.6T (900X900)

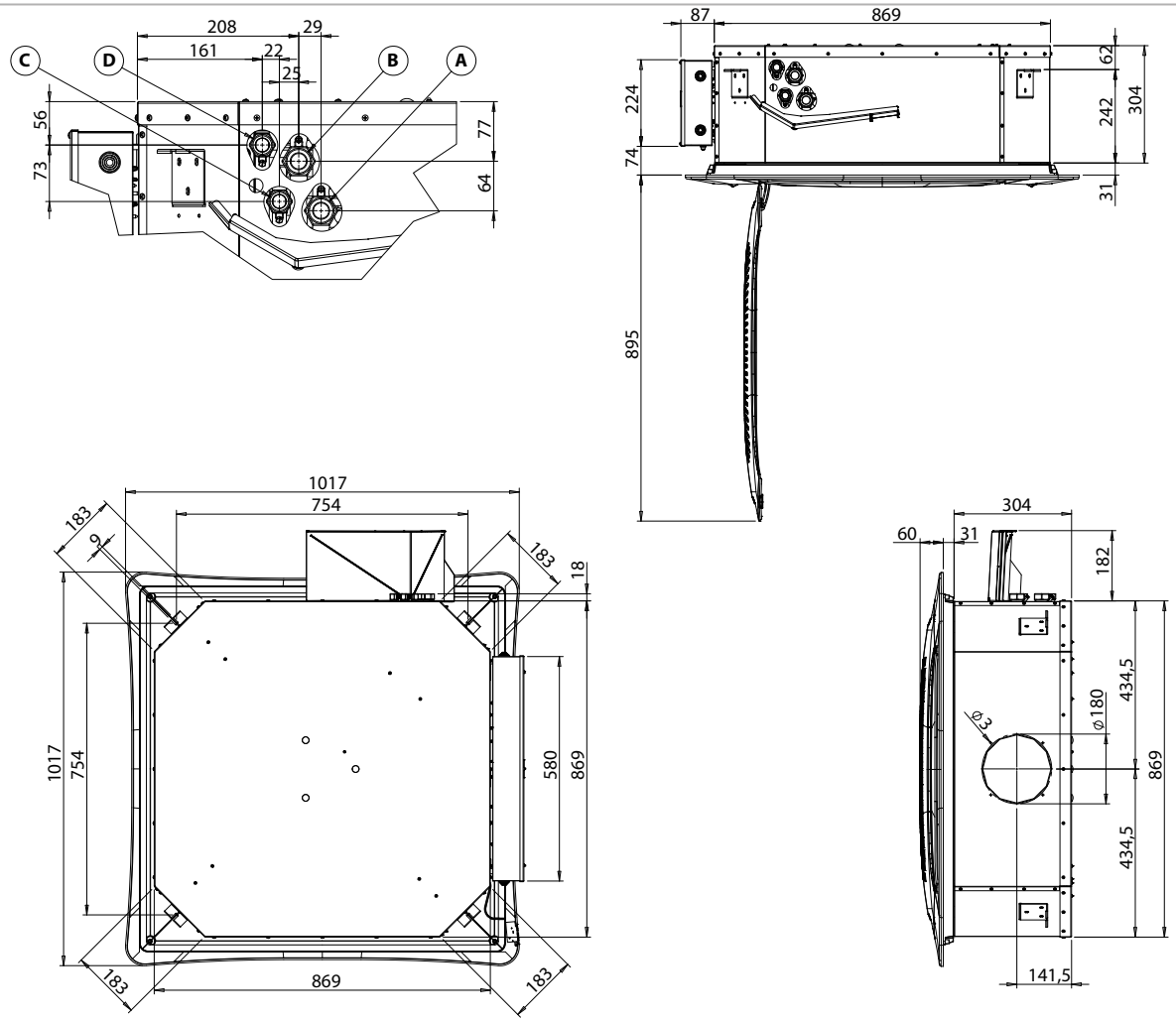

2 pipe unit
- **A** Flow, heating/cooling 1"
- **B** Return, heating/cooling 1"

4 pipe unit
- **A** Flow, cooling 1"
- **B** Return, cooling 1"
- **C** Flow, heating 3/4"
- **D** Return, heating 3/4"

PACKED UNIT

UNIT

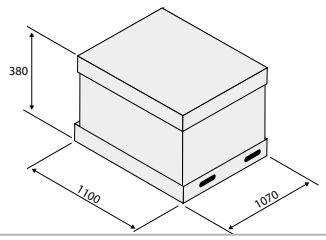

DIFFUSER

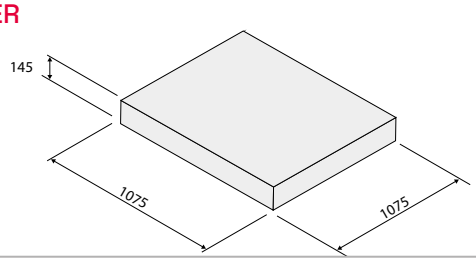

WEIGHT/MODEL		7.2T	7.6T	8.2T	8.6T
With packaging	kg	52			
Without packaging	kg	42			

WEIGHT/MODEL		7.2T	7.6T	8.2T	8.6T
With packaging	kg	9,4			
Without packaging	kg	7,5			

redge

NEXT LEVEL
HVAC SOLUTIONS

redge

COMFORTAIR HD3
COMFORTAIR HD3 ECM

High wall fan coil units

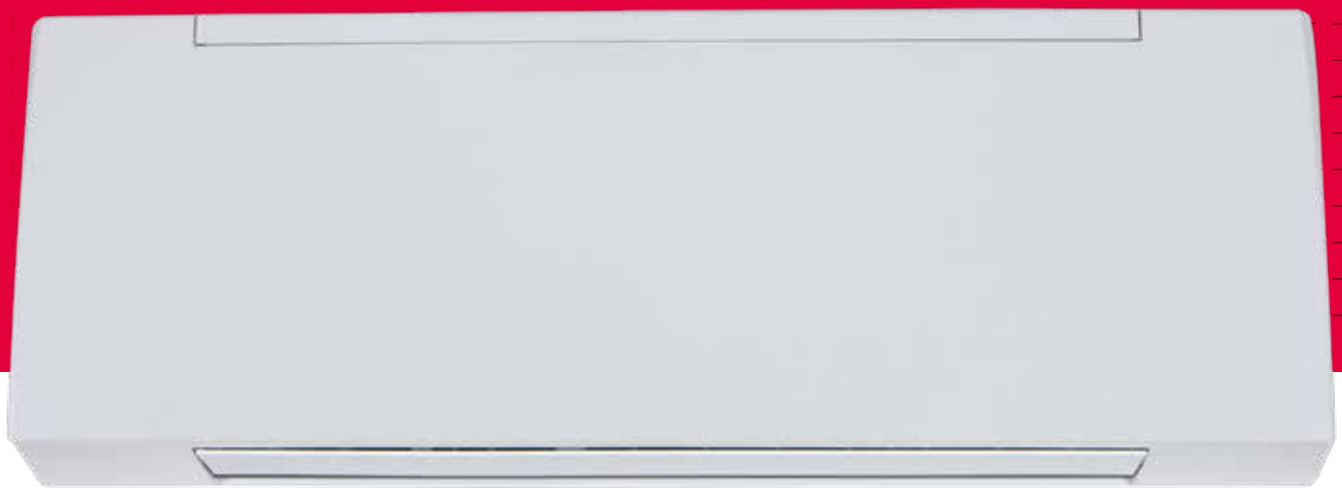

CFE

MODEL
CFE - COMFORTAIR HD3
CFE EC - COMFORTAIR ECM HD3

TS

VERSION
-- - Basic
TS - IR control
MB - MB board

3V

VALVE
-- - no valve
2V - 2 way
3V - 3 way

E

HEATER
-- - Basic
E - Electric heater

2

SIZE
1
2
3
4

2 PIPE UNIT

The following standard rating conditions are used:

COOLING

Entering air temperature: + 27 °C d.b. + 19 °C w.b.
Water temperature: +7 °C E.W.T. +12 °C L.W.T.

HEATING

Entering air temperature: + 20 °C
Water temperature: +45 °C E.W.T. +40 °C L.W.T.

MODEL		COMFORTAIR HD3 1						COMFORTAIR HD3 2					
SPEED		1	2	3	4	5	6	1	2	3	4	5	6
		MIN	MED		MAX			MIN		MED		MAX	
Air flow	m^3/h	205	270	340	375	470	500	250	305	365	400	480	545
Cooling total emission	kW	1,23	1,49	1,74	1,85	2,13	2,20	1,42	1,62	1,82	1,93	2,16	2,32
Cooling sensible emission	kW	0,91	1,13	1,34	1,44	1,70	1,77	1,06	1,23	1,41	1,51	1,73	1,89
Heating emission	kW	1,34	1,68	2,02	2,18	2,58	2,71	1,58	1,85	2,13	2,29	2,62	2,88
Dp Cooling	kPa	4,8	6,8	9,0	10,1	12,9	13,8	6,2	7,9	9,8	10,8	13,2	15,1
Dp Heating	kPa	4,5	6,8	9,4	10,8	14,7	15,9	6,1	8,1	10,4	11,8	15,1	17,8
Fan	W	12	14	17	18	24	30	12	14	18	20	24	32
Sound power (Lw)	dB(A)	35	41	46	48	52	53	39	43	47	49	53	55
Sound pressure (Lp) (1)	dB(A)	26	32	37	39	43	44	30	34	38	40	44	46

MODEL		COMFORTAIR HD3 3						COMFORTAIR HD3 4					
SPEED		1	2	3	4	5	6	1	2	3	4	5	6
		MIN	MED		MAX				MIN		MED		MAX
Air flow	m^3/h	280	375	480	545	730	780	300	440	500	610	675	790
Cooling total emission	kW	1,87	2,30	2,75	3,00	3,59	3,73	1,97	2,60	2,83	3,23	3,43	3,76
Cooling sensible emission	kW	1,33	1,67	2,03	2,24	2,77	2,90	1,41	1,91	2,10	2,44	2,62	2,93
Heating emission	kW	1,89	2,37	2,93	3,23	4,04	4,24	2,00	2,73	3,02	3,53	3,80	4,28
Dp Cooling	kPa	11,2	16,2	22,5	26,3	36,4	39,1	14,1	23,0	27,2	34,0	38,5	45,1
Dp Heating	kPa	9,1	13,8	20,1	24,1	35,9	39,2	12,7	22,2	26,7	35,2	40,4	49,8
Fan	W	16	21	26	29	38	46	17	23	27	32	35	48
Sound power (Lw)	dB(A)	35	40	45	51	55	57	36	43	46	51	54	57
Sound pressure (Lp) (1)	dB(A)	26	31	36	42	46	48	27	34	37	42	45	48

(1) The sound pressure levels are 9 dB (A) lower than the sound power levels, apply to the reverberant field of a 100 m^3 room and a reverberation time of 0.5 sec.
MIN-MED-MAX = Speeds connected in the factory

OPERATION LIMITS

DESCRIPTION		UOM	VALUE
Water flow	Coil maximum working pressure	bars	10
		kPa	1000
	Lowest water inlet temperature (1)	°C	+6
	Highest water inlet temperature	°C	+70
Power supply	Single-phase rated operating voltage	V/Hz	230/50

(1) for entering water temperatures below +6 °C, contact the technical department

INSTALLATION HEIGHT

MODEL		COMFORTAIR HD3 1	COMFORTAIR HD3 2	COMFORTAIR HD3 3	COMFORTAIR HD3 4
Minimum installation height	m	2			
Maximum installation height	m	3			

MOTOR ELECTRICAL DATA - MAX. ABSORPTION

MODEL		COMFORTAIR HD3 1	COMFORTAIR HD3 2	COMFORTAIR HD3 3	COMFORTAIR HD3 4
Motor absorption	W	30	32	46	48
Current absorbed	A	0,16		0,23	





DIMENSIONS

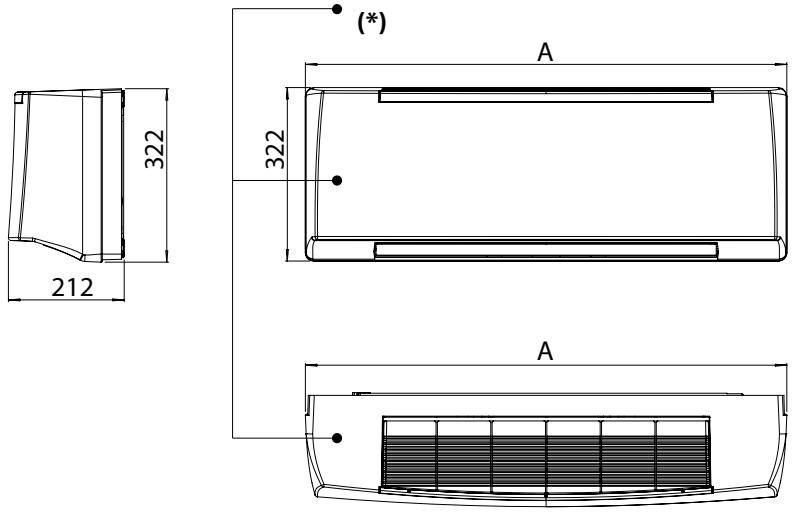

(*) = Hydraulic connections

MODEL		COMFORTAIR HD31	COMFORTAIR HD32	COMFORTAIR HD33	COMFORTAIR HD34
A	mm	880		1185	

FIXING DIMENSIONS

FRONT VIEW

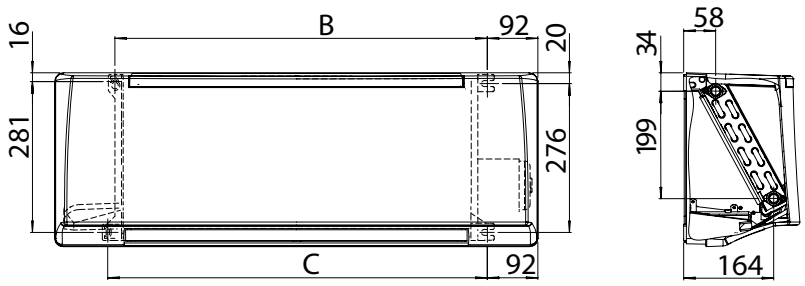

REAR VIEW

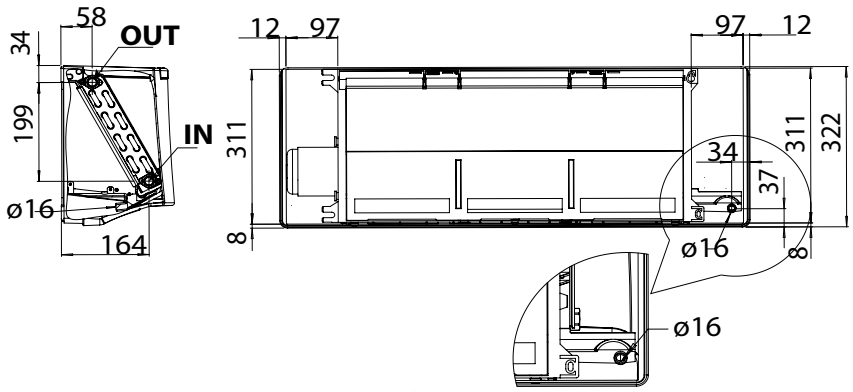

MODEL		COMFORTAIR HD31	COMFORTAIR HD32	COMFORTAIR HD33	COMFORTAIR HD34
B	mm	678		983	
C	mm	691		996	

PACKED UNIT

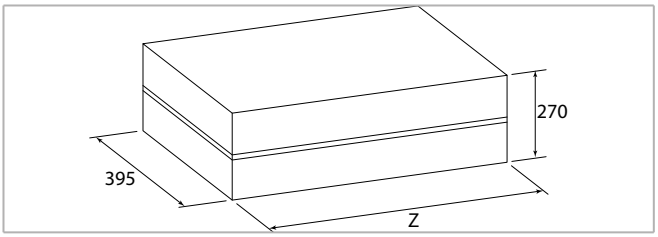

MODEL		COMFORTAIR HD3 1	COMFORTAIR HD3 2	COMFORTAIR HD3 3	COMFORTAIR HD3 4
Z	mm	950		1255	

WEIGHT

Weight with packaging

MODEL		COMFORTAIR HD3 1	COMFORTAIR HD3 2	COMFORTAIR HD3 3	COMFORTAIR HD3 4
Weight with packaging without valves	kg	12		16	
Weight with packaging with valves	kg	13		17	

Weight without packaging

MODEL		COMFORTAIR HD3 1	COMFORTAIR HD3 2	COMFORTAIR HD3 3	COMFORTAIR HD3 4
Weight without packaging without valves	kg	10		13	
Weight without packaging with valves	kg	11		14	

2 PIPE UNIT

The following standard rating conditions are used:

COOLING

Entering air temperature: + 27 °C d.b. + 19 °C w.b.
Water temperature: +7 °C E.W.T. +12 °C L.W.T.

HEATING

Entering air temperature: + 20 °C
Water temperature: +45 °C E.W.T. +40 °C L.W.T.

MODEL		COMFORTAIR HD3 ECM 0						COMFORTAIR HD3 ECM 1				
INVERTER SPEED SIGNAL (VDC)		1	2	3	5	7,5	10	1	3	5	7,5	10
		MIN			MED		MAX	MIN		MED		MAX
Air flow	m^3/h	130	148	230	290	340	415	190	240	290	355	415
Cooling total emission	kW	0,61	0,86	1,28	1,57	1,78	1,98	1,16	1,38	1,57	1,80	1,98
Cooling sensible emission	kW	0,47	0,66	0,90	1,19	1,38	1,56	0,85	1,03	1,19	1,39	1,56
Heating emission	kW	0,72	1,05	1,48	1,78	2,15	2,35	1,26	1,53	1,78	2,09	2,35
Dp Cooling	kPa	1,4	2,6	5,2	7,7	9,4	11,2	5,0	5,9	7,7	9,4	11,2
Dp Heating	kPa	1,6	3,0	5,6	7,5	12,0	12,4	4,0	5,7	7,5	10,0	12,4
Fan	W	3	4	7	9	10	15	6	7	9	11	15
Sound power (Lw)	dB(A)	26	30	38	46	49	52	35	39	46	48	52
Sound pressure (Lp) (1)	dB(A)	17	21	29	37	40	43	26	30	37	39	43

MODEL		COMFORTAIR HD3 ECM 2					COMFORTAIR HD3 ECM 3				
INVERTER SPEED SIGNAL (VDC)		1	3	5	7,5	10	1	3	5	7,5	10
		MIN		MED		MAX	MIN		MED		MAX
Air flow	m^3/h	260	315	375	440	510	270	345	420	520	620
Cooling total emission	kW	1,46	1,66	1,86	2,05	2,24	1,82	2,19	2,52	2,92	3,27
Cooling sensible emission	kW	1,09	1,27	1,45	1,63	1,81	1,30	1,59	1,85	2,17	2,48
Heating emission	kW	1,63	1,90	2,18	2,46	2,74	1,83	2,24	2,63	3,11	3,57
Dp Cooling	kPa	6,9	8,2	10,1	12,0	14,1	10,7	14,8	19,0	24,8	30,4
Dp Heating	kPa	6,4	8,4	10,8	13,4	16,3	8,7	12,5	16,6	22,5	28,8
Fan	W	7	9	12	16	21	6	8	11	15	20
Sound power (Lw)	dB(A)	40	44	47	51	55	37	42	45	49	53
Sound pressure (Lp) (1)	dB(A)	31	35	38	42	46	28	33	36	40	44

MODEL		COMFORTAIR HD3 ECM 4				
INVERTER SPEED SIGNAL (VDC)		1	3	5	7,5	10
		MIN		MED		MAX
Air flow	m^3/h	375	465	550	665	770
Cooling total emission	kW	2,33	2,71	3,03	3,41	3,72
Cooling sensible emission	kW	1,69	2,00	2,27	2,61	2,89
Heating emission	kW	2,40	2,85	3,26	3,76	4,20
Dp Cooling	kPa	16,5	21,6	26,6	32,9	38,7
Dp Heating	kPa	14,1	19,3	24,4	31,7	38,6
Fan	W	9	12	16	22	30
Sound power (Lw)	dB(A)	43	46	49	53	57
Sound pressure (Lp) (1)	dB(A)	34	37	40	44	48

(1) The sound pressure levels are 9 dB (A) lower than the sound power levels, apply to the reverberant field of a 100 m^3 room and a reverberation time of 0.5 sec.

DIMENSIONS

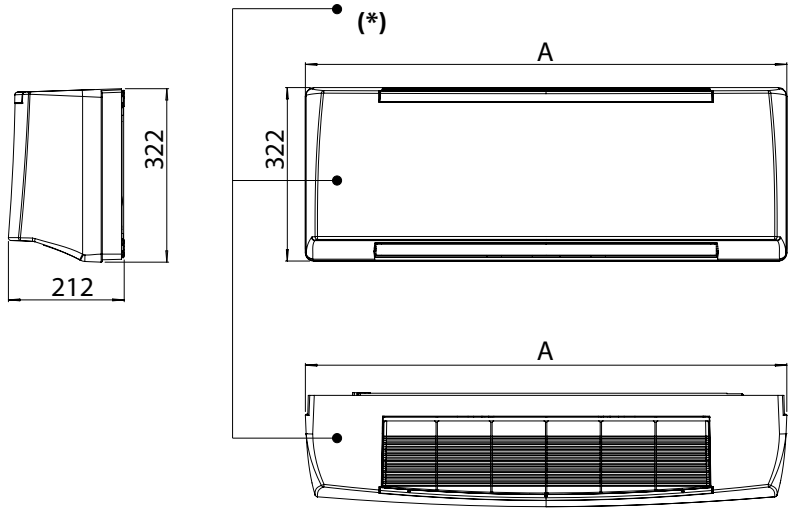

(*) = Hydraulic connections

MODEL		COMFORTAIR HD3 ECM 0	COMFORTAIR HD3 ECM 1	COMFORTAIR HD3 ECM 2	COMFORTAIR HD3 ECM 3	COMFORTAIR HD3 ECM 4
A	mm	880			1185	

FIXING DIMENSIONS

FRONT VIEW

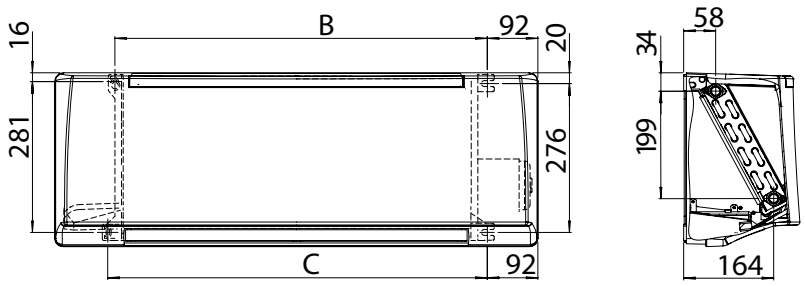

REAR VIEW

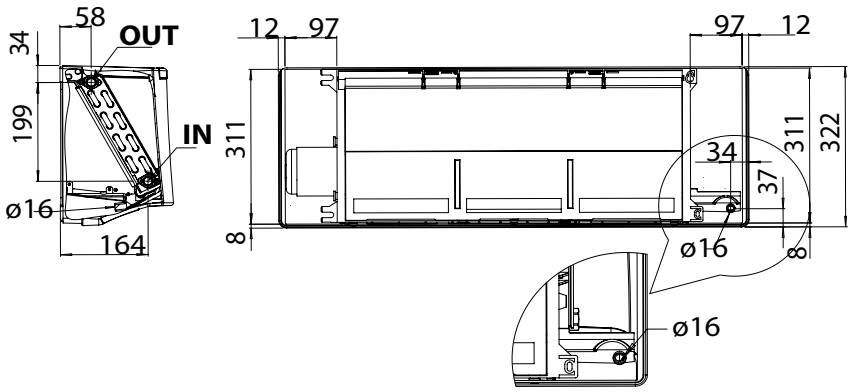

MODEL		COMFORTAIR HD3 ECM 0	COMFORTAIR HD3 ECM 1	COMFORTAIR HD3 ECM 2	COMFORTAIR HD3 ECM 3	COMFORTAIR HD3 ECM 4
B	mm	678			983	
C	mm	691			996	

PACKED UNIT

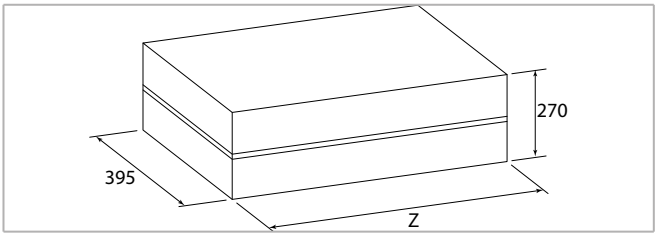

MODEL		COMFORTAIR HD3 ECM 0	COMFORTAIR HD3 ECM 1	COMFORTAIR HD3 ECM 2	COMFORTAIR HD3 ECM 3	COMFORTAIR HD3 ECM 4
Z	mm	950			1255	

WEIGHT

Weight with packaging

MODEL		COMFORTAIR HD3 ECM 0	COMFORTAIR HD3 ECM 1	COMFORTAIR HD3 ECM 2	COMFORTAIR HD3 ECM 3	COMFORTAIR HD3 ECM 4
Weight with packaging without valves	kg	12			16	
Weight with packaging with valves	kg	13			17	

Weight without packaging

MODEL		COMFORTAIR HD3 ECM 0	COMFORTAIR HD3 ECM 1	COMFORTAIR HD3 ECM 2	COMFORTAIR HD3 ECM 3	COMFORTAIR HD3 ECM 4
Weight without packaging without valves	kg	10			13	
Weight without packaging with valves	kg	11			14	

redge

INALTO MPS
INALTO MPS ECM

Ducted units Medium ESP

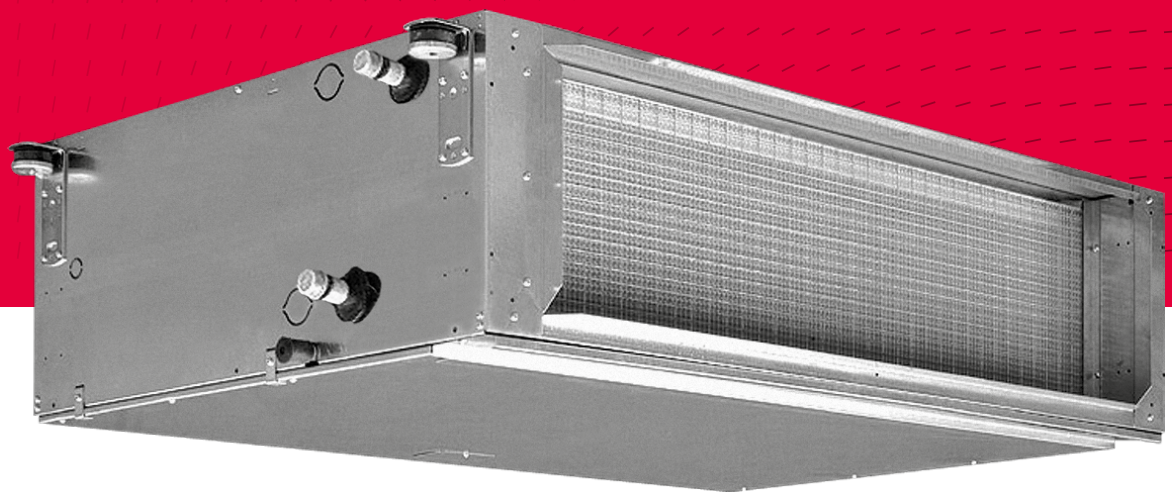

INALTO MPS	3	3	L
MODEL MPA - DUCTED MPS AC Motor MPE - DUCTED MPS EC Motor	**SIZE** 1 2 3 4 5 6 7 8 9	**COIL ROWS** 3 3+1 3+2 4 4+1	**HYDRAULIC CONNECTIONS** L - Left R - Right

Range includes 7 air flow rates (from 340 to 2100 m3/h), each equipped with 3 or 4 row coil and with the possibility to add a 1 or 2 row coil for 4 pipe systems.
It is the most comprehensive range, perfect to meet all air-conditioning requirements of work environments like offices, shops, restaurants and hotel rooms featuring ducted installations with available pressure up to 80 Pa.
Compliant with Regulation (EU) No. 327/2011.



CASING

Made of 1 mm galvanized steel, a rear panel and two lateral sides insulated with 3 mm polyolefin (PO) foam B-s2-d0 EN 13501-1.

FAN ASSEMBLY

The fans have aluminium or plastic blades directly keyed on the motor with double aspiration and they are dynamically and statically balanced during manufacture in order to have an extremely quiet operation.

ELECTRIC MOTOR

The motor is wired for single phase and has five speeds with capacitor. The motor is fitted on sealed for life bearings and is secured on anti-vibration and self-lubricating mountings. Internal thermal protection with automatic reset, protection IP 20, class B.

COIL

It is manufactured from drawn copper tube and the aluminium fins are mechanically bonded onto the tube by an expansion process. The main coil and additional coil are equipped with two Ø 1/2" BSP female gas connections.
The coil has Ø 1/8" inch BSP air vent and drain.
The coil is not suitable for use in corrosive atmosphere or in environments where aluminium may be subject to corrosion.
The connections are on the left side looking from the air outlet of the unit (see picture).
On request we can deliver the unit with the connections on the right end side. This operation can also be easily carried out on the construction site during installation.

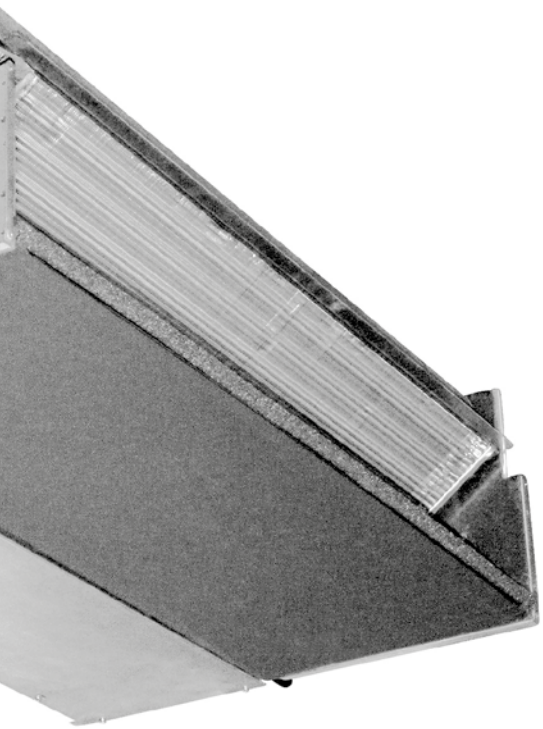

CONDENSATE COLLECTION TRAY

Made of plastic (ABS UL94 HB) for sizes 1÷4 and painted steel for sizes 5÷7 with a L-shaped fitted on the inner casing; the tray is insulated with 3 mm polyolefin (PO) foam B-s2-d0 EN 13501-1. The outside diameter of the condensate discharge pipe is 15 mm.

FILTER

Polypropylene cellular fabric regenerating filter.
The filter frame of galvanized steel is inserted into special plastic sliding guides fastened to the internal structure for easy insertion and removal of the filter.

3 ROW COIL - 2 PIPE UNITS

The following standard rating conditions are used:

COOLING

Entering air temperature: + 27 °C d.b. + 19 °C w.b.
Water temperature: +7 °C E.W.T. +12 °C L.W.T.

HEATING

Entering air temperature: + 20 °C
Water temperature: +45 °C E.W.T. +40 °C L.W.T.

MODEL		INALTO 13			INALTO 23			INALTO 33			INALTO 43		
SPEED		1	4	5	1	4	5	1	4	5	1	4	5
		MIN	MED	MAX	MIN	MED	MAX	MIN	MED	MAX	MIN	MED	MAX
Air flow	m^3/h	205	290	315	395	575	625	380	720	790	600	850	980
Available pressure	Pa	25	50	58	26	50	58	14	50	60	23	50	65
Cooling total emission	kW	1,43	1,88	2,00	2,57	3,40	3,60	2,68	4,42	4,72	3,85	4,97	5,47
Cooling sensible emission	kW	1,01	1,35	1,44	1,85	2,53	2,70	1,90	3,30	3,55	2,82	3,77	4,22
Heating emission	kW	1,43	1,96	2,11	2,67	3,70	3,98	2,71	4,82	5,22	4,10	5,56	6,27
Dp Cooling	kPa	11,0	17,0	20,0	10,6	17,7	19,6	6,3	15,7	17,7	12,2	19,4	23,2
Dp Heating	kPa	9,0	16,0	18,0	8,9	16,1	18,3	5,1	14,3	16,6	10,7	18,6	23,0
Fan	W	27	45	51	59	87	94	50	96	110	89	120	146
Sound power outlet (Lw)	dB(A)	34	42	43	38	47	49	36	48	51	44	52	55
Sound power inlet + radiated (Lw)	dB(A)	42	50	52	45	55	56	43	56	58	51	59	62
Sound pressure level outlet (Lp) (1)	dB(A)	25	33	34	29	38	40	27	39	42	35	43	46
Sound pressure level inlet + radiated (Lp) (1)	dB(A)	33	41	43	36	46	47	34	47	49	42	50	53
Plenum code		9069191	9069191	9069191	9069222	9069222	9069222	9066368	9066368	9066368	9066368	9066368	9066368

MODEL		INALTO 53			INALTO 63			INALTO 73		
SPEED		1	4	5	1	4	5	1	3	4
		MIN	MED	MAX	MIN	MED	MAX	MIN	MED	MAX
Air flow	m^3/h	475	810	970	580	1120	1240	905	1270	1425
Available pressure	Pa	18	50	70	15	50	60	26	50	63
Cooling total emission	kW	3,30	5,04	5,72	3,99	6,62	7,11	5,58	7,11	7,70
Cooling sensible emission	kW	2,31	3,64	4,19	2,83	4,94	5,36	4,06	5,37	5,89
Heating emission	kW	3,33	5,36	6,25	3,94	6,96	7,58	5,82	7,73	8,49
Dp Cooling	kPa	12,2	26,3	33,1	6,6	16,4	18,7	12,2	18,8	21,7
Dp Heating	kPa	9,7	23,0	30,4	5,1	14,2	16,5	10,3	17,1	20,2
Fan	W	65	110	140	66	125	145	155	177	186
Sound power outlet (Lw)	dB(A)	37	48	53	38	50	52	46	53	56
Sound power inlet + radiated (Lw)	dB(A)	43	56	60	46	58	60	53	60	63
Sound pressure level outlet (Lp) (1)	dB(A)	28	39	44	29	41	43	37	44	47
Sound pressure level inlet + radiated (Lp) (1)	dB(A)	34	47	51	37	49	51	44	51	54
Plenum code		9069195	9069195	9069195	9069196	9069196	9069196	9069196	9069196	9069196

(1) The sound pressure levels are 9 dB (A) lower than the sound power levels, apply to the reverberant field of a 100 m^3 room and a reverberation time of 0.5 sec.
MIN-MED-MAX = Speeds connected in the factory

4 ROW COIL - 2 PIPE UNITS

The following standard rating conditions are used:

COOLING

Entering air temperature: + 27 °C d.b. + 19 °C w.b.
Water temperature: +7 °C E.W.T. +12 °C L.W.T.

HEATING

Entering air temperature: + 20 °C
Water temperature: +45 °C E.W.T. +40 °C L.W.T.

MODEL		INALTO 14			INALTO 24			INALTO 34			INALTO 44		
SPEED		1	4	5	1	4	5	1	4	5	1	4	5
		MIN	MED	MAX	MIN	MED	MAX	MIN	MED	MAX	MIN	MED	MAX
Air flow	m^3/h	205	290	315	395	575	625	380	720	790	600	850	980
Available pressure	Pa	25	50	58	26	50	58	14	50	60	23	50	65
Cooling total emission	kW	1,54	2,07	2,22	2,93	4,01	4,28	2,89	4,99	5,36	4,10	5,36	5,94
Cooling sensible emission	kW	1,07	1,46	1,57	2,03	2,84	3,04	2,00	3,55	3,84	2,95	3,97	4,46
Heating emission	kW	1,49	2,07	2,23	2,85	4,02	4,34	2,76	4,99	5,42	4,22	5,77	6,55
Dp Cooling	kPa	5,6	9,7	11,0	15,8	27,9	31,3	11,8	31,7	36,1	7,9	12,9	15,6
Dp Heating	kPa	5,1	9,2	10,5	12,3	22,8	26,2	8,6	24,9	28,9	6,6	11,5	14,5
Fan	W	27	45	51	59	87	94	50	96	110	89	120	146
Sound power outlet (Lw)	dB(A)	34	42	43	38	47	49	36	48	51	44	52	55
Sound power inlet + radiated (Lw)	dB(A)	42	50	52	45	55	56	43	56	58	51	59	62
Sound pressure level outlet (Lp) (1)	dB(A)	25	33	34	29	38	40	27	39	42	35	43	46
Sound pressure level inlet + radiated (Lp) (1)	dB(A)	33	41	43	36	46	47	34	47	49	42	50	53
Plenum code		9069191	9069191	9069191	9069222	9069222	9069222	9066368	9066368	9066368	9066368	9066368	9066368

MODEL		INALTO 54			INALTO 64			INALTO 74		
SPEED		1	4	5	1	4	5	1	3	4
		MIN	MED	MAX	MIN	MED	MAX	MIN	MED	MAX
Air flow	m^3/h	475	810	970	580	1120	1240	905	1270	1425
Available pressure	Pa	18	50	70	15	50	60	26	50	63
Cooling total emission	kW	3,48	5,44	6,22	4,23	7,25	7,82	6,10	7,92	8,62
Cooling sensible emission	kW	2,43	3,89	4,52	2,96	5,26	5,72	4,34	5,80	6,38
Heating emission	kW	3,41	5,57	6,54	4,17	7,63	8,34	6,30	8,52	9,42
Dp Cooling	kPa	6,3	14,2	18,1	5,1	13,6	15,6	10,1	16,1	18,7
Dp Heating	kPa	5,2	12,5	16,7	4,3	12,7	15,0	9,0	15,6	18,6
Fan	W	65	110	140	66	125	145	155	177	186
Sound power outlet (Lw)	dB(A)	37	48	53	38	50	52	46	53	56
Sound power inlet + radiated (Lw)	dB(A)	43	56	60	46	58	60	53	60	63
Sound pressure level outlet (Lp) (1)	dB(A)	28	39	44	29	41	43	37	44	47
Sound pressure level inlet + radiated (Lp) (1)	dB(A)	34	47	51	37	49	51	44	51	54
Plenum code		9069195	9069195	9069195	9069196	9069196	9069196	9069196	9069196	9069196

(1) The sound pressure levels are 9 dB (A) lower than the sound power levels, apply to the reverberant field of a 100 m^3 room and a reverberation time of 0.5 sec.
MIN-MED-MAX = Speeds connected in the factory

3+1 ROW COIL - 4 PIPE UNITS

The following standard rating conditions are used:

COOLING

Entering air temperature: + 27 °C d.b. + 19 °C w.b.
Water temperature: +7 °C E.W.T. +12 °C L.W.T.

HEATING

Entering air temperature: + 20 °C
Water temperature: +65 °C E.W.T. +55 °C L.W.T.

MODEL		INALTO 13+1			INALTO 23+1			INALTO 33+1			INALTO 43+1		
SPEED		1	4	5	1	4	5	1	4	5	1	4	5
		MIN	MED	MAX	MIN	MED	MAX	MIN	MED	MAX	MIN	MED	MAX
Air flow	m^3/h	205	290	315	395	575	625	380	720	790	600	850	980
Available pressure	Pa	25	50	58	26	50	58	14	50	60	23	50	65
Cooling total emission	kW	1,43	1,88	2,00	2,57	3,40	3,60	2,68	4,42	4,72	3,85	4,97	5,47
Cooling sensible emission	kW	1,01	1,35	1,44	1,85	2,53	2,70	1,90	3,30	3,55	2,82	3,77	4,22
Heating emission	kW	1,30	1,66	1,76	2,22	2,85	3,02	2,38	3,68	3,91	3,26	4,10	4,49
Dp Cooling	kPa	10,5	17,4	19,5	10,6	17,7	19,6	6,3	15,7	17,7	12,2	19,4	23,2
Dp Heating	kPa	4,4	6,8	7,5	2,8	4,3	4,8	3,1	6,7	7,5	5,4	8,2	9,6
Fan	W	27	45	51	59	87	94	50	96	110	89	120	146
Sound power outlet (Lw)	dB(A)	34	42	43	38	47	49	36	48	51	44	52	55
Sound power inlet + radiated (Lw)	dB(A)	42	50	52	45	55	56	43	56	58	51	59	62
Sound pressure level outlet (Lp) (1)	dB(A)	25	33	34	29	38	40	27	39	42	35	43	46
Sound pressure level inlet + radiated (Lp) (1)	dB(A)	33	41	43	36	46	47	34	47	49	42	50	53
Plenum code		9069191	9069191	9069191	9069222	9069222	9069222	9066368	9066368	9066368	9066368	9066368	9066368

MODEL		INALTO 53+1			INALTO 63+1			INALTO 73+1		
SPEED		1	4	5	1	4	5	1	3	4
		MIN	MED	MAX	MIN	MED	MAX	MIN	MED	MAX
Air flow	m^3/h	475	810	970	580	1120	1240	905	1270	1425
Available pressure	Pa	18	50	70	15	50	60	26	50	63
Cooling total emission	kW	3,32	5,10	5,78	3,99	6,62	7,11	5,58	7,11	7,70
Cooling sensible emission	kW	2,33	3,67	4,23	2,83	4,94	5,36	4,06	5,37	5,89
Heating emission	kW	2,85	4,11	4,63	3,48	5,44	5,80	4,72	5,90	6,35
Dp Cooling	kPa	12,3	26,7	33,7	6,6	16,4	18,7	12,2	18,8	21,7
Dp Heating	kPa	3,8	7,4	9,1	6,1	13,7	15,3	10,6	15,8	18,1
Fan	W	65	110	140	66	125	145	155	177	186
Sound power outlet (Lw)	dB(A)	37	48	53	38	50	52	46	53	56
Sound power inlet + radiated (Lw)	dB(A)	43	56	60	46	58	60	53	60	63
Sound pressure level outlet (Lp) (1)	dB(A)	28	39	44	29	41	43	37	44	47
Sound pressure level inlet + radiated (Lp) (1)	dB(A)	34	47	51	37	49	51	44	51	54
Plenum code		9069195	9069195	9069195	9069196	9069196	9069196	9069196	9069196	9069196

(1) The sound pressure levels are 9 dB (A) lower than the sound power levels, apply to the reverberant field of a 100 m^3 room and a reverberation time of 0.5 sec.
MIN-MED-MAX = Speeds connected in the factory

3 ROW COIL - 2 PIPE UNITS

The following standard rating conditions are used:

COOLING

Entering air temperature: + 27 °C d.b. + 19 °C w.b.
Water temperature: +7 °C E.W.T. +12 °C L.W.T.

HEATING

Entering air temperature: + 20 °C
Water temperature: +45 °C E.W.T. +40 °C L.W.T.

Available pressure: 0 Pa

MODEL		INALTO 13					INALTO 23					INALTO 33					INALTO 43				
SPEED		1	2	3	4	5	1	2	3	4	5	1	2	3	4	5	1	2	3	4	5
		MIN			MED	MAX	MIN			MED	MAX	MIN			MED	MAX	MIN			MED	MAX
Air flow	m³/h	340	400	445	490	535	515	600	660	780	860	500	620	750	960	1115	655	815	955	1080	1340
Cooling total emission	kW	2,14	2,41	2,59	2,81	2,93	3,16	3,52	3,75	4,29	4,47	3,36	3,98	4,57	5,54	6,00	4,12	4,83	5,39	6,00	6,74
Cooling sensible emission	kW	1,57	1,78	1,94	2,09	2,24	2,33	2,63	2,84	3,23	3,49	2,44	2,93	3,43	4,19	4,72	3,04	3,65	4,15	4,58	5,43
Heating emission	kW	2,25	2,59	2,84	3,08	3,31	3,37	3,84	4,16	4,78	5,18	3,48	4,22	4,98	6,16	6,99	4,43	5,36	6,14	6,80	8,11
Dp Cooling	kPa	21,7	26,8	30,7	34,6	38,5	15,3	18,6	21,0	25,7	28,8	9,4	12,8	16,5	22,6	27,1	13,8	18,4	22,4	26,1	33,7
Dp Heating	kPa	20,2	26,0	30,6	35,4	40,3	13,6	17,2	19,8	25,4	29,4	8,0	11,3	15,2	22,3	28,0	12,3	17,4	22,2	26,7	36,6
Fan	W	28,0	35,0	41,0	47,0	55,0	62,0	74,0	82,0	98,0	110,0	50,0	64,0	80,0	106,0	126,0	93,0	110,0	127,0	142,0	175,0
Sound power (Lw)	dB(A)	40	43	46	48	51	42	46	48	52	55	38	43	48	54	57	45	51	55	58	63
Sound pressure (Lp) (1)	dB(A)	31	34	37	39	42	33	37	39	43	46	29	34	39	44	48	36	42	46	49	54

MODEL		INALTO 53					INALTO 63					INALTO 73				
SPEED		1	2	3	4	5	1	2	3	4	5	1	2	3	4	5
		MIN			MED	MAX	MIN			MED	MAX	MIN		MED	MAX	
Air flow	m³/h	595	760	895	1030	1375	720	1015	1210	1425	1635	970	1190	1490	1810	2100
Cooling total emission	kW	3,98	4,82	5,43	6,11	7,24	4,77	6,19	7,01	7,97	8,56	5,87	6,78	7,90	9,22	9,89
Cooling sensible emission	kW	2,82	3,46	3,95	4,42	5,53	3,44	4,58	5,27	5,99	6,67	4,30	5,08	6,08	7,09	7,97
Heating emission	kW	4,08	5,06	5,84	6,59	8,38	4,77	6,41	7,43	8,49	9,50	6,18	7,32	8,80	10,29	11,54
Dp Cooling	kPa	17,0	24,1	29,9	35,7	50,6	9,0	14,5	18,1	22,1	26,1	13,4	17,4	22,9	28,8	34,1
Dp Heating	kPa	14,1	20,7	26,9	33,4	51,4	7,2	12,2	15,9	20,2	24,7	11,4	15,5	21,6	28,6	35,2
Fan	W	70,0	94,0	111,0	129,0	174,0	68,0	100,0	122,0	144,0	166,0	163,0	186,0	213,0	228,0	245,0
Sound power (Lw)	dB(A)	43	49	53	56	62	42	49	54	58	61	48	54	59	63	66
Sound pressure (Lp) (1)	dB(A)	34	40	44	47	53	33	40	45	48	52	39	45	49	53	57

(1) The sound pressure levels are 9 dB (A) lower than the sound power levels, apply to the reverberant field of a 100 m³ room and a reverberation time of 0.5 sec.
MIN-MED-MAX = Speeds connected in the factory

4 ROW COIL - 2 PIPE UNITS

The following standard rating conditions are used:

COOLING

Entering air temperature: + 27 °C d.b. + 19 °C w.b.
Water temperature: +7 °C E.W.T. +12 °C L.W.T.

HEATING

Entering air temperature: + 20 °C
Water temperature: +45 °C E.W.T. +40 °C L.W.T.

Available pressure: 0 Pa

MODEL		INALTO 14					INALTO 24					INALTO 34					INALTO 44				
SPEED		1	2	3	4	5	1	2	3	4	5	1	2	3	4	5	1	2	3	4	5
		MIN			MED	MAX	MIN			MED	MAX	MIN			MED	MAX	MIN			MED	MAX
Air flow	m³/h	340	400	445	490	535	515	600	660	780	860	500	620	750	960	1115	655	815	955	1080	1340
Cooling total emission	kW	2,39	2,71	2,94	3,21	3,37	3,69	4,16	4,48	5,18	5,45	3,71	4,44	5,17	6,34	6,95	4,41	5,20	5,84	6,53	7,42
Cooling sensible emission	kW	1,71	1,97	2,15	2,33	2,50	2,59	2,96	3,21	3,69	3,99	2,59	3,13	3,69	4,54	5,14	3,18	3,83	4,38	4,85	5,77
Heating emission	kW	2,39	2,78	3,06	3,33	3,60	3,63	4,18	4,56	5,29	5,76	3,57	4,34	5,17	6,43	7,32	4,57	5,56	6,41	7,12	8,57
Dp Cooling	kPa	12,3	15,5	17,9	20,5	23,0	23,8	29,6	33,8	42,4	48,3	18,4	25,4	33,6	47,1	57,4	9,0	12,2	15,0	17,7	23,2
Dp Heating	kPa	11,9	15,5	18,5	21,5	24,8	19,0	24,5	28,6	37,4	43,6	13,7	19,4	26,6	39,4	49,7	7,6	10,8	13,9	16,8	23,5
Fan	W	28,0	35,0	41,0	47,0	55,0	62,0	74,0	82,0	98,0	110,0	50,0	64,0	80,0	106,0	126,0	93,0	110,0	127,0	142,0	175,0
Sound power (Lw)	dB(A)	40	43	46	48	51	42	46	48	52	55	38	43	48	54	57	45	51	55	58	63
Sound pressure (Lp) (1)	dB(A)	31	34	37	39	42	33	37	39	43	46	29	34	39	44	48	36	42	46	49	54

MODEL		INALTO 54					INALTO 64					INALTO 74				
SPEED		1	2	3	4	5	1	2	3	4	5	1	2	3	4	5
		MIN			MED	MAX	MIN			MED	MAX	MIN		MED	MAX	
Air flow	m³/h	595	760	895	1030	1375	720	1015	1210	1425	1635	970	1190	1490	1810	2100
Cooling total emission	kW	4,24	5,18	5,88	6,65	8,01	5,10	6,75	7,69	8,80	9,55	6,45	7,53	8,88	10,42	11,29
Cooling sensible emission	kW	2,98	3,69	4,24	4,76	6,02	3,60	4,86	5,62	6,42	7,18	4,61	5,48	6,60	7,74	8,72
Heating emission	kW	4,21	5,26	6,09	6,90	8,84	5,10	6,98	8,16	9,42	10,62	6,70	8,04	9,80	11,58	13,13
Dp Cooling	kPa	9,0	13,0	16,3	19,7	28,5	7,2	11,9	15,1	18,7	22,4	11,2	14,8	19,9	25,4	30,5
Dp Heating	kPa	7,6	11,3	14,7	18,4	28,8	6,2	10,9	14,4	18,6	23,1	10,1	14,0	20,0	27,0	33,9
Fan	W	70,0	94,0	111,0	129,0	174,0	68,0	100,0	122,0	144,0	166,0	163,0	186,0	213,0	228,0	245,0
Sound power (Lw)	dB(A)	43	49	53	56	62	42	49	54	58	61	48	54	59	63	66
Sound pressure (Lp) (1)	dB(A)	34	40	44	47	53	33	40	45	48	52	39	45	49	53	57

(1) The sound pressure levels are 9 dB (A) lower than the sound power levels, apply to the reverberant field of a 100 m³ room and a reverberation time of 0.5 sec.
MIN-MED-MAX = Speeds connected in the factory

3+1 ROW COIL - 4 PIPE UNITS

The following standard rating conditions are used:

COOLING

Entering air temperature: + 27 °C d.b. + 19 °C w.b.
Water temperature: +7 °C E.W.T. +12 °C L.W.T.

HEATING

Entering air temperature: + 20 °C
Water temperature: +65 °C E.W.T. +55 °C L.W.T.

Available pressure: 0 Pa

MODEL		INALTO 13+1					INALTO 23+1					INALTO 33+1					INALTO 43+1				
SPEED		1	2	3	4	5	1	2	3	4	5	1	2	3	4	5	1	2	3	4	5
		MIN			MED	MAX	MIN			MED	MAX	MIN			MED	MAX	MIN			MED	MAX
Air flow	m^3/h	340	400	445	490	535	515	600	660	780	860	500	620	750	960	1115	655	815	955	1080	1340
Cooling total emission	kW	2,14	2,41	2,59	2,81	2,93	3,16	3,52	3,75	4,29	4,47	3,36	3,98	4,57	5,54	6,00	4,12	4,83	5,39	6,00	6,74
Cooling sensible emission	kW	1,57	1,78	1,94	2,09	2,24	2,33	2,63	2,84	3,23	3,49	2,44	2,93	3,43	4,19	4,72	3,04	3,65	4,15	4,58	5,43
Heating emission	kW	1,85	2,06	2,21	2,36	2,50	2,65	2,94	3,12	3,48	3,70	2,88	3,33	3,78	4,44	4,87	3,45	3,99	4,41	4,78	5,48
Dp Cooling	kPa	21,7	26,8	30,7	34,6	38,5	15,3	18,6	21,0	25,7	28,8	9,4	12,8	16,5	22,6	27,1	13,8	18,4	22,4	26,1	33,7
Dp Heating	kPa	8,3	10,0	11,4	12,8	14,1	3,8	4,6	5,1	6,2	6,9	4,3	5,6	7,1	9,4	11,2	6,0	7,8	9,3	10,8	13,8
Fan	W	28,0	35,0	41,0	47,0	55,0	62,0	74,0	82,0	98,0	110,0	50,0	64,0	80,0	106,0	126,0	93,0	110,0	127,0	142,0	175,0
Sound power (Lw)	dB(A)	40	43	46	48	51	42	46	48	52	55	38	43	48	54	57	45	51	55	58	63
Sound pressure (Lp) (1)	dB(A)	31	34	37	39	42	33	37	39	43	46	29	34	39	44	48	36	42	46	49	54

MODEL		INALTO 53+1					INALTO 63+1					INALTO 73+1				
SPEED		1	2	3	4	5	1	2	3	4	5	1	2	3	4	5
		MIN			MED	MAX	MIN			MED	MAX	MIN		MED	MAX	
Air flow	m^3/h	595	760	895	1030	1375	720	1015	1210	1425	1635	970	1190	1490	1810	2100
Cooling total emission	kW	3,98	4,82	5,43	6,11	7,24	4,77	6,19	7,01	7,97	8,56	5,87	6,78	7,90	9,22	9,89
Cooling sensible emission	kW	2,82	3,46	3,95	4,42	5,53	3,44	4,58	5,27	5,99	6,67	4,30	5,08	6,08	7,09	7,97
Heating emission	kW	3,34	3,94	4,39	4,81	5,79	4,05	5,66	5,72	6,35	6,93	4,94	5,66	6,53	7,40	8,12
Dp Cooling	kPa	17,0	24,1	29,9	35,7	50,6	9,0	14,5	18,1	22,1	26,1	13,4	17,4	22,9	28,8	34,1
Dp Heating	kPa	5,1	6,8	8,3	9,8	13,7	8,0	14,7	14,9	18,1	21,1	11,5	14,7	19,0	23,8	28,1
Fan	W	70,0	94,0	111,0	129,0	174,0	68,0	100,0	122,0	144,0	166,0	163,0	186,0	213,0	228,0	245,0
Sound power (Lw)	dB(A)	43	49	53	56	62	42	49	54	58	61	48	54	59	63	66
Sound pressure (Lp) (1)	dB(A)	34	40	44	47	53	33	40	45	48	52	39	45	49	53	57

(1) The sound pressure levels are 9 dB (A) lower than the sound power levels, apply to the reverberant field of a 100 m^3 room and a reverberation time of 0.5 sec.
MIN-MED-MAX = Speeds connected in the factory

DIMENSIONS

VERTICAL INSTALLATION

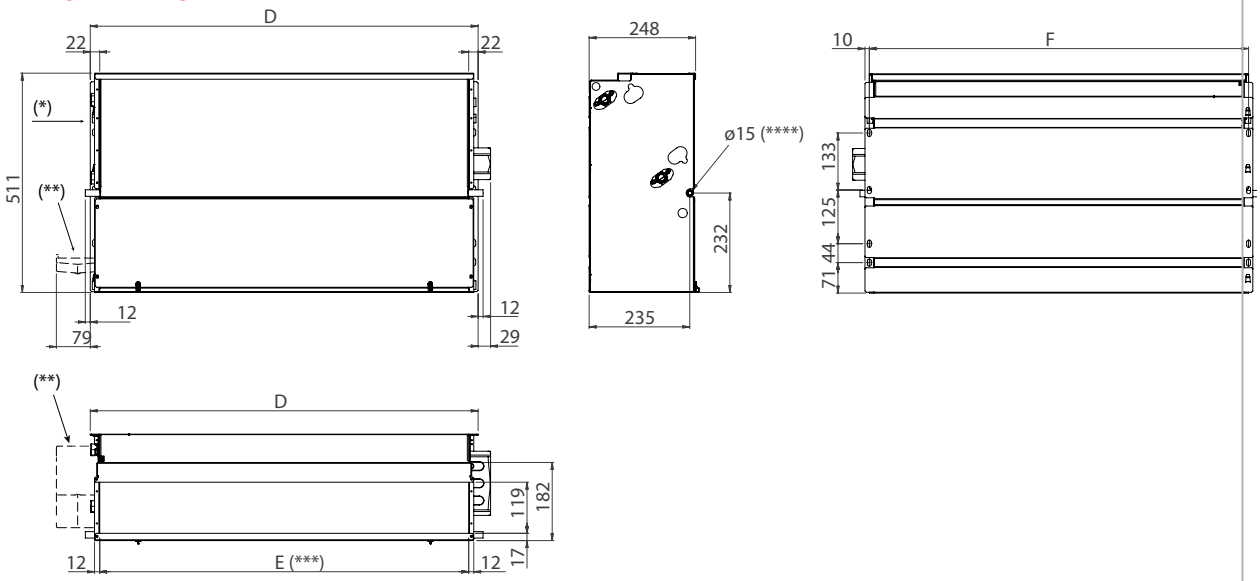

(*) = Hydraulic connections on the left
(**) = Auxiliary condensate tray (optional)
(***) = Supply frame dimension E x 119 mm
(****) = External diameter

HORIZONTAL INSTALLATION

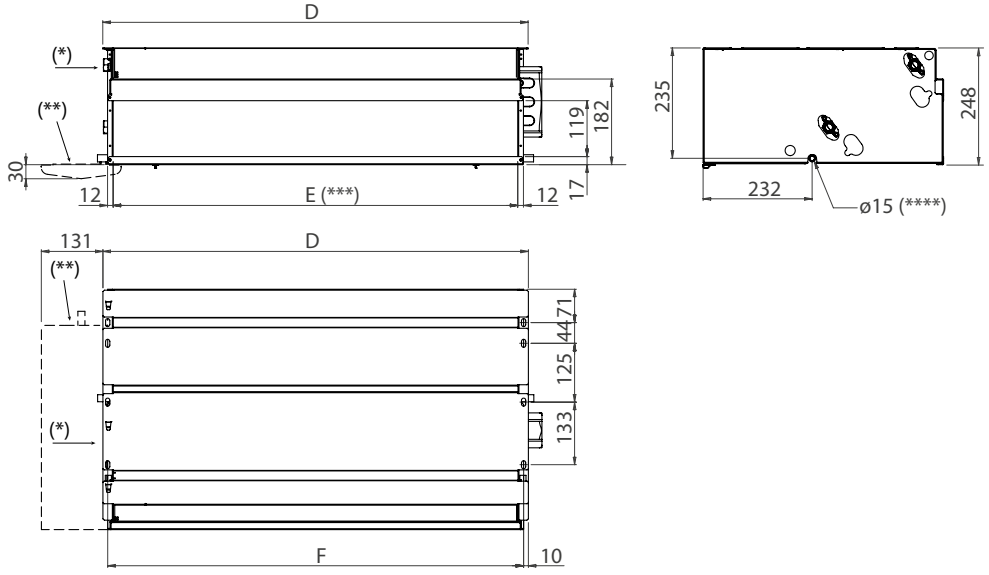

(*) = Hydraulic connections on the left
(**) = Auxiliary condensate tray (optional)
(***) = Supply frame dimension E x 119 mm
(****) = External diameter

MODEL		INALTO 1	INALTO 2	INALTO 3	INALTO 4	INALTO 5	INALTO 6	INALTO 7
D	mm	689	904	1119		1334	1549	
E	mm	645	860	1075		1290	1505	
F	mm	669	884	1099		1314	1529	

PACKED UNIT

MODEL		INALTO 1	INALTO 2	INALTO 3	INALTO 4	INALTO 5	INALTO 6	INALTO 7
Y	mm	820	1035	1250		1580	1790	

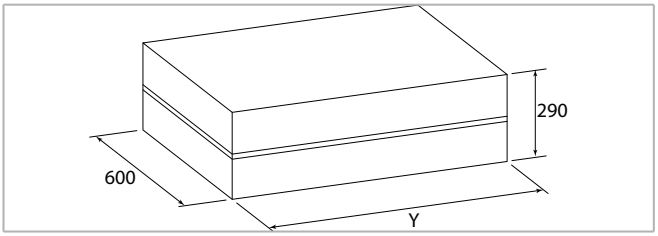

WEIGHT

Weight with packaging

MODEL		INALTO 1	INALTO 2	INALTO 3	INALTO 4	INALTO 5	INALTO 6	INALTO 7
3 rows	kg	19,5	26,4	29,5	30,9	42,4	52,2	52,4
3+1 rows	kg	20,7	27,9	31,3	32,7	44,3	54,5	54,7
3+2 rows	kg	21,4	28,8	32,4	33,8	-	-	-
4 rows	kg	20,5	27,7	30,9	32,0	43,8	53,9	54,1
4+1 rows	kg	21,7	29,2	32,7	33,8	45,7	56,2	56,4

Weight without packaging

MODEL		INALTO 1	INALTO 2	INALTO 3	INALTO 4	INALTO 5	INALTO 6	INALTO 7
3 rows	kg	18,5	25,4	26,5	27,9	38,4	47,2	47,4
3+1 rows	kg	19,7	26,9	28,3	29,7	40,3	49,5	49,7
3+2 rows	kg	20,4	27,8	29,4	30,8	-	-	-
4 rows	kg	19,5	26,7	27,9	29,0	39,8	48,9	49,1
4+1 rows	kg	20,7	28,2	29,7	30,8	41,7	51,2	51,4

3 ROW COIL - 2 PIPE UNITS

The following standard rating conditions are used:

COOLING

Entering air temperature: + 27 °C d.b. + 19 °C w.b.
Water temperature: +7 °C E.W.T. +12 °C L.W.T.

HEATING

Entering air temperature: + 20 °C
Water temperature: +45 °C E.W.T. +40 °C L.W.T.

MODEL		INALTO-ECM 03			INALTO-ECM 13			INALTO-ECM 23		
INVERTER SPEED SIGNAL (VDC)		1,5	5,5	8	4	6,3	8	4	6,5	8,5
		MIN	MED	MAX	MIN	MED	MAX	MIN	MED	MAX
Air flow	m^3/h	110	225	290	240	305	360	430	540	630
Available pressure	Pa	10	50	75	32	50	68	34	50	70
Cooling total emission	kW	0,75	1,39	1,65	1,64	1,97	2,23	2,72	3,21	3,55
Cooling sensible emission	kW	0,55	1,00	1,30	1,17	1,42	1,63	1,99	2,38	2,68
Heating emission	kW	0,80	1,50	1,90	1,65	2,05	2,37	2,88	3,51	4,00
Dp Cooling	kPa	3,5	6,7	9,2	13,3	18,7	23,5	11,5	15,6	18,9
Dp Heating	kPa	1,7	5,5	8,0	11,6	17,0	22,1	10,2	14,6	18,5
Fan	W	7	21	37	18	29	39	26	43	64
Sound power outlet (Lw)	dB(A)	29	43	48	38	44	48	42	47	49
Sound power inlet + radiated (Lw)	dB(A)	36	50	55	45	51	55	48	55	58
Sound pressure level outlet (Lp) (1)	dB(A)	20	34	39	29	35	39	33	38	40
Sound pressure level inlet + radiated (Lp) (1)	dB(A)	27	41	46	36	42	46	39	46	49
Plenum code		9069190	9069190	9069190	9069191	9069191	9069191	9069222	9069222	9069222

MODEL		INALTO-ECM 43			INALTO-ECM 73			INALTO-ECM 83		
INVERTER SPEED SIGNAL (VDC)		3,5	7	9	2,5	5	8	5,5	7,5	9
		MIN	MED	MAX	MIN	MED	MAX	MIN	MED	MAX
Air flow	m^3/h	595	835	960	900	1175	1410	1238	1638	1923
Available pressure	Pa	24	50	66	30	50	72	28	50	70
Cooling total emission	kW	3,84	4,94	5,43	5,66	6,81	7,67	6,75	8,60	10,00
Cooling sensible emission	kW	2,83	3,77	4,21	4,15	5,11	5,86	5,05	6,50	7,80
Heating emission	kW	4,07	5,56	6,27	5,69	7,09	8,24	7,00	9,25	10,70
Dp Cooling	kPa	11,8	18,9	22,5	12,1	17,1	21,4	19,0	29,0	39,0
Dp Heating	kPa	10,6	18,6	23,0	9,8	14,6	19,1	25,0	34,0	43,0
Fan	W	30	67	98	52	100	155	84	160	246
Sound power outlet (Lw)	dB(A)	44	52	55	47	54	57	49	56	59
Sound power inlet + radiated (Lw)	dB(A)	51	59	62	54	61	64	56	63	66
Sound pressure level outlet (Lp) (1)	dB(A)	35	43	46	38	45	48	40	47	50
Sound pressure level inlet + radiated (Lp) (1)	dB(A)	42	50	53	45	52	55	47	54	57
Plenum code		9066368	9066368	9066368	9069196	9069196	9069196	9069198	9069198	9069198

(1) The sound pressure levels are 9 dB (A) lower than the sound power levels, apply to the reverberant field of a 100 m^3 room and a reverberation time of 0.5 sec.

4 ROW COIL - 2 PIPE UNITS

The following standard rating conditions are used:

COOLING

Entering air temperature: + 27 °C d.b. + 19 °C w.b.
Water temperature: +7 °C E.W.T. +12 °C L.W.T.

HEATING

Entering air temperature: + 20 °C
Water temperature: +45 °C E.W.T. +40 °C L.W.T.

MODEL		INALTO-ECM 04			INALTO-ECM 14			INALTO-ECM 24		
INVERTER SPEED SIGNAL (VDC)		1,5	5,5	8	4	6,3	8	4	6,5	8,5
		MIN	MED	MAX	MIN	MED	MAX	MIN	MED	MAX
Air flow	m^3/h	110	225	290	240	305	360	430	540	630
Available pressure	Pa	10	50	75	32	50	68	34	50	70
Cooling total emission	kW	0,80	1,55	1,95	1,77	2,17	2,48	3,14	3,79	4,25
Cooling sensible emission	kW	0,60	1,15	1,45	1,25	1,54	1,78	2,20	2,68	3,04
Heating emission	kW	0,80	1,65	2,00	1,73	2,17	2,52	3,08	3,80	4,37
Dp Cooling	kPa	3,5	10,8	15,4	7,2	10,3	13,2	17,5	24,7	30,6
Dp Heating	kPa	2,6	8,1	12,3	6,7	9,9	13,1	14,1	20,6	26,6
Fan	W	7	21	37	18	29	39	26	43	64
Sound power outlet (Lw)	dB(A)	29	43	48	38	44	48	42	47	49
Sound power inlet + radiated (Lw)	dB(A)	36	50	55	45	51	55	48	55	58
Sound pressure level outlet (Lp) (1)	dB(A)	20	34	39	29	35	39	33	38	40
Sound pressure level inlet + radiated (Lp) (1)	dB(A)	27	41	46	36	42	46	39	46	49
Plenum code		9069190	9069190	9069190	9069191	9069191	9069191	9069222	9069222	9069222

MODEL		INALTO-ECM 44			INALTO-ECM 74			INALTO-ECM 84		
INVERTER SPEED SIGNAL (VDC)		3,5	7	9	2,5	5	8	5,5	7,5	9
		MIN	MED	MAX	MIN	MED	MAX	MIN	MED	MAX
Air flow	m^3/h	595	835	960	900	1175	1410	1238	1638	1923
Available pressure	Pa	24	50	66	30	50	72	28	50	70
Cooling total emission	kW	4,09	5,34	5,91	6,12	7,46	8,47	7,20	9,25	10,60
Cooling sensible emission	kW	2,95	3,97	4,45	4,40	5,48	6,33	5,50	7,10	8,20
Heating emission	kW	4,19	5,77	6,55	6,26	7,96	9,35	8,00	10,00	11,50
Dp Cooling	kPa	7,7	12,6	15,2	9,9	14,3	18,1	20,0	30,0	40,0
Dp Heating	kPa	6,5	11,5	14,5	8,9	13,8	18,4	20,0	30,0	39,0
Fan	W	30	67	98	52	100	155	84	160	246
Sound power outlet (Lw)	dB(A)	44	52	55	47	54	57	49	56	59
Sound power inlet + radiated (Lw)	dB(A)	51	59	62	54	61	64	56	63	66
Sound pressure level outlet (Lp) (1)	dB(A)	35	43	46	38	45	48	40	47	50
Sound pressure level inlet + radiated (Lp) (1)	dB(A)	42	50	53	45	52	55	47	54	57
Plenum code		9066368	9066368	9066368	9069196	9069196	9069196	9069198	9069198	9069198

(1) The sound pressure levels are 9 dB (A) lower than the sound power levels, apply to the reverberant field of a 100 m^3 room and a reverberation time of 0.5 sec.

3+1 ROW COIL - 4 PIPE UNITS

The following standard rating conditions are used:

COOLING

Entering air temperature: + 27 °C d.b. + 19 °C w.b.
Water temperature: +7 °C E.W.T. +12 °C L.W.T.

HEATING

Entering air temperature: + 20 °C
Water temperature: +65 °C E.W.T. +55 °C L.W.T.

MODEL		INALTO-ECM 03+1			INALTO-ECM 13+1			INALTO-ECM 23+1		
INVERTER SPEED SIGNAL (VDC)		1,5	5,5	8	4	6,3	8	4	6,5	8,5
		MIN	MED	MAX	MIN	MED	MAX	MIN	MED	MAX
Air flow	m^3/h	110	225	290	240	305	360	430	540	630
Available pressure	Pa	10	50	75	32	50	68	34	50	70
Cooling total emission	kW	0,75	1,39	1,65	1,64	1,97	2,23	2,72	3,21	3,55
Cooling sensible emission	kW	0,55	1,00	1,30	1,17	1,42	1,63	1,98	2,38	2,67
Heating emission	kW	0,56	1,07	1,29	1,46	1,72	1,92	2,36	2,74	3,03
Dp Cooling	kPa	3,5	5,5	6,5	13,3	18,7	23,5	11,5	15,6	18,9
Dp Heating	kPa	1,1	2,4	3,2	5,4	7,2	8,9	3,1	4,0	4,8
Fan	W	7	21	37	18	29	39	26	43	64
Sound power outlet (Lw)	dB(A)	29	43	48	38	44	48	42	47	49
Sound power inlet + radiated (Lw)	dB(A)	36	50	55	45	51	55	48	55	58
Sound pressure level outlet (Lp) (1)	dB(A)	20	34	39	29	35	39	33	38	40
Sound pressure level inlet + radiated (Lp) (1)	dB(A)	27	41	46	36	42	46	39	46	49
Plenum code		9069190	9069190	9069190	9069191	9069191	9069191	9069222	9069222	9069222

MODEL		INALTO-ECM 43+1			INALTO-ECM 73+1			INALTO-ECM 83+1		
INVERTER SPEED SIGNAL (VDC)		3,5	7	9	2,5	5	8	5,5	7,5	9
		MIN	MED	MAX	MIN	MED	MAX	MIN	MED	MAX
Air flow	m^3/h	595	835	960	900	1175	1410	1238	1638	1923
Available pressure	Pa	24	50	66	30	50	72	28	50	70
Cooling total emission	kW	3,84	4,88	5,35	5,66	6,81	7,67	6,75	8,60	10,00
Cooling sensible emission	kW	2,83	3,71	4,13	4,15	5,11	5,86	5,05	6,50	7,80
Heating emission	kW	3,09	3,87	4,22	4,70	5,60	6,31	6,00	7,00	7,80
Dp Cooling	kPa	11,8	18,4	21,9	12,1	17,1	21,4	19,0	29,0	39,0
Dp Heating	kPa	4,9	7,4	8,6	10,5	14,4	17,8	20,0	27,0	29,0
Fan	W	30	67	98	52	100	155	84	160	246
Sound power outlet (Lw)	dB(A)	44	52	55	47	54	57	49	56	59
Sound power inlet + radiated (Lw)	dB(A)	51	59	62	54	61	64	56	63	66
Sound pressure level outlet (Lp) (1)	dB(A)	35	43	46	38	45	48	40	47	50
Sound pressure level inlet + radiated (Lp) (1)	dB(A)	42	50	53	45	52	55	47	54	57
Plenum code		9066368	9066368	9066368	9069196	9069196	9069196	9069198	9069198	9069198

(1) The sound pressure levels are 9 dB (A) lower than the sound power levels, apply to the reverberant field of a 100 m^3 room and a reverberation time of 0.5 sec.

3 ROW COIL - 2 PIPE UNITS

The following standard rating conditions are used:

COOLING

Entering air temperature: + 27 °C d.b. + 19 °C w.b.
Water temperature: +7 °C E.W.T. +12 °C L.W.T.

HEATING

Entering air temperature: + 20 °C
Water temperature: +45 °C E.W.T. +40 °C L.W.T.
Available pressure: 0 Pa

MODEL		INALTO-ECM 03					INALTO-ECM 13					INALTO-ECM 23				
INVERTER SPEED SIGNAL (VDC)		1	3	5	7	0	1	3	5	7,5	10	1	3	5	7,5	10
Air flow	m^3/h	120	299	364	452	567	330	440	560	650	650	550	710	880	1085	1235
Cooling total emission	kW	0,79	1,57	1,80	2,08	2,45	2,11	2,59	3,04	3,39	3,34	3,27	3,89	4,46	5,15	5,44
Cooling sensible emission	kW	0,56	1,18	1,37	1,60	1,93	1,54	1,94	2,34	2,62	2,62	2,44	2,98	3,51	4,09	4,48
Heating emission	kW	0,82	1,73	2,02	2,39	2,83	2,19	2,82	3,44	3,88	3,88	3,56	4,43	5,27	6,22	6,87
Dp Cooling	kPa	3,5	6,8	9,5	11,5	15,6	20,8	30,2	40,7	48,4	48,4	15,9	21,8	28,1	35,7	41,1
Dp Heating	kPa	1,8	7,1	9,4	12,9	17,7	19,2	30,1	43,1	53,7	53,7	15,0	22,2	30,3	40,9	48,9
Fan	W	5,2	14,1	21,2	33,4	55,5	14,0	21,0	37,0	54,0	54,0	21,0	33,0	54,0	92,0	132,0
Sound power (Lw)	dB(A)	30	43	51	55	61	41	48	54	58	58	45	51	55	60	64
Sound pressure (Lp) (1)	dB(A)	21	34	42	46	52	32	39	45	49	49	36	42	46	51	55

MODEL		INALTO-ECM 43					INALTO-ECM 73					INALTO-ECM 83				
INVERTER SPEED SIGNAL (VDC)		1	3	5	7,5	10	1	3	5	7,5	10	1	3	5	7,5	10
Air flow	m^3/h	615	830	1055	1315	1390	880	1240	1605	2110	2460	400	1020	1540	2270	2980
Cooling total emission	kW	3,95	4,89	5,75	6,72	6,82	5,58	7,12	8,43	10,17	10,91	3,10	6,50	8,80	11,50	13,60
Cooling sensible emission	kW	2,92	3,73	4,51	5,33	5,54	4,09	5,39	6,57	8,07	9,00	2,10	4,60	6,40	8,60	10,30
Heating emission	kW	4,19	5,45	6,66	7,98	8,35	5,57	7,43	9,14	11,30	12,69	2,80	6,40	8,90	12,10	14,60
Dp Cooling	kPa	12,4	18,3	24,6	32,0	34,1	11,8	18,3	25,0	34,3	40,8	4,4	16,4	28,3	45,6	63,5
Dp Heating	kPa	11,1	17,9	25,7	35,6	38,5	9,5	15,9	23,1	33,9	41,7	3,2	13,2	24,2	42,0	60,9
Fan	W	20,0	34,0	57,0	101,0	136,0	29,0	55,0	98,0	173,0	277,0	10,4	29,5	79,7	218,2	461,4
Sound power (Lw)	dB(A)	44	51	57	63	64	48	56	61	67	70	32	48	59	67	72
Sound pressure (Lp) (1)	dB(A)	35	42	48	54	55	39	47	52	58	61	23	39	50	58	63

(1) The sound pressure levels are 9 dB (A) lower than the sound power levels, apply to the reverberant field of a 100 m^3 room and a reverberation time of 0.5 sec.

4 ROW COIL - 2 PIPE UNITS

The following standard rating conditions are used:

COOLING

Entering air temperature: + 27 °C d.b. + 19 °C w.b.
Water temperature: +7 °C E.W.T. +12 °C L.W.T.

HEATING

Entering air temperature: + 20 °C
Water temperature: +45 °C E.W.T. +40 °C L.W.T.

Available pressure: 0 Pa

MODEL		INALTO-ECM 04					INALTO-ECM 14					INALTO-ECM 24				
INVERTER SPEED SIGNAL (VDC)		1	3	5	7	10	1	3	5	7,5	10	1	3	5	7,5	10
Air flow	m^3/h	120	299	364	452	567	330	440	560	650	650	550	710	880	1085	1235
Cooling total emission	kW	0,89	1,82	2,11	2,45	2,86	2,33	2,92	3,48	3,91	3,85	3,87	4,70	5,48	6,41	6,87
Cooling sensible emission	kW	0,61	1,30	1,50	1,77	2,08	1,67	2,13	2,60	2,93	2,93	2,75	3,40	4,04	4,76	5,25
Heating emission	kW	0,83	1,82	2,14	2,55	3,05	2,33	3,02	3,75	4,27	4,27	3,86	4,86	5,88	7,03	7,82
Dp Cooling	kPa	3,5	11,1	14,4	19,1	25,3	11,6	17,5	24,1	29,2	29,2	25,4	36,1	47,8	62,3	73,1
Dp Heating	kPa	2,6	9,6	12,9	17,8	24,9	11,3	18,1	26,7	33,7	33,7	21,2	32,1	45,2	62,5	75,6
Fan	W	5,2	14,1	21,2	33,4	55,5	14,0	21,0	37,0	54,0	54,0	21,0	33,0	54,0	92,0	132,0
Sound power (Lw)	dB(A)	30	43	51	55	61	41	48	54	58	58	45	51	55	60	64
Sound pressure (Lp) (1)	dB(A)	21	34	42	46	52	32	39	45	49	49	36	42	46	51	55

MODEL		INALTO-ECM 44					INALTO-ECM 74					INALTO-ECM 84				
INVERTER SPEED SIGNAL (VDC)		1	3	5	7,5	10	1	3	5	7,5	10	1	3	5	7,5	10
Air flow	m^3/h	615	830	1055	1315	1390	880	1240	1605	2110	2460	400	1020	1540	2270	2980
Cooling total emission	kW	4,21	5,29	6,27	7,38	7,52	6,03	7,81	9,36	11,40	12,32	3,20	6,90	9,40	12,30	14,70
Cooling sensible emission	kW	3,05	3,93	4,77	5,67	5,90	4,34	5,78	7,10	8,79	9,83	2,20	4,80	6,70	8,90	10,90
Heating emission	kW	4,32	5,67	6,99	8,44	8,83	6,14	8,35	10,45	13,16	14,91	2,90	6,70	9,50	12,80	15,70
Dp Cooling	kPa	8,1	12,2	16,7	22,0	23,5	9,6	15,3	21,3	29,9	35,7	1,7	11,0	18,9	31,1	43,2
Dp Heating	kPa	6,8	11,1	16,3	22,8	24,8	8,6	15,0	22,5	34,0	42,6	2,0	8,7	16,0	28,0	40,9
Fan	W	20,0	34,0	57,0	101,0	136,0	29,0	55,0	98,0	173,0	277,0	10,4	29,5	79,7	218,2	461,4
Sound power (Lw)	dB(A)	44	51	57	63	64	48	56	61	67	70	32	48	59	67	72
Sound pressure (Lp) (1)	dB(A)	35	42	48	54	55	39	47	52	58	61	23	39	50	58	63

(1) The sound pressure levels are 9 dB (A) lower than the sound power levels, apply to the reverberant field of a 100 m^3 room and a reverberation time of 0.5 sec.

3+1 ROW COIL - 4 PIPE UNITS

The following standard rating conditions are used:

COOLING

Entering air temperature: + 27 °C d.b. + 19 °C w.b.
Water temperature: +7 °C E.W.T. +12 °C L.W.T.

HEATING

Entering air temperature: + 20 °C
Water temperature: +65 °C E.W.T. +55 °C L.W.T.

Available pressure: 0 Pa

MODEL		INALTO-ECM 03+1					INALTO-ECM 13+1					INALTO-ECM 23+1				
INVERTER SPEED SIGNAL (VDC)		1	3	5	7	10	1	3	5	7,5	10	1	3	5	7,5	10
Air flow	m^3/h	120	299	364	452	567	330	440	560	650	650	550	710	880	1085	1235
Cooling total emission	kW	0,89	1,82	2,11	2,45	2,86	2,11	2,59	3,04	3,39	3,34	3,27	3,89	4,46	5,15	5,44
Cooling sensible emission	kW	0,61	1,30	1,50	1,77	2,08	1,54	1,94	2,34	2,62	2,62	2,44	2,98	3,51	4,09	4,48
Heating emission	kW	0,74	1,42	1,61	1,85	2,12	1,82	2,20	2,57	2,82	2,82	2,78	3,27	3,75	4,28	4,64
Dp Cooling	kPa	2,4	11,1	14,4	19,1	25,3	20,8	30,2	40,7	48,4	48,4	15,9	21,8	28,1	35,7	41,1
Dp Heating	kPa	0,8	3,0	3,9	5,0	7,5	8,0	11,2	14,9	17,6	17,6	4,1	5,5	7,1	9,0	10,4
Fan	W	5,2	14,1	21,2	33,4	55,5	14,0	21,0	37,0	54,0	54,0	21,0	33,0	54,0	92,0	132,0
Sound power (Lw)	dB(A)	30	43	51	55	61	41	48	54	58	58	45	51	55	60	64
Sound pressure (Lp) (1)	dB(A)	21	34	42	46	52	32	39	45	49	49	36	42	46	51	55

MODEL		INALTO-ECM 43+1					INALTO-ECM 73+1					INALTO-ECM 83+1				
INVERTER SPEED SIGNAL (VDC)		1	3	5	7,5	10	1	3	5	7,5	10	1	3	5	7,5	10
Air flow	m^3/h	615	830	1055	1315	1390	880	1240	1605	2110	2460	400	1020	1540	2270	2980
Cooling total emission	kW	3,95	4,89	5,75	6,72	6,82	5,58	7,12	8,43	10,17	10,91	3,10	6,60	8,90	11,60	13,80
Cooling sensible emission	kW	2,92	3,73	4,51	5,33	5,54	4,09	5,39	6,57	8,07	9,00	2,10	4,70	6,40	8,60	10,50
Heating emission	kW	3,16	3,85	4,49	5,17	5,35	4,64	5,80	6,85	8,16	8,97	3,10	6,30	8,40	10,80	12,70
Dp Cooling	kPa	12,4	18,3	24,6	32,0	34,1	11,8	18,3	25,0	34,3	40,8	4,5	17,1	29,4	47,6	66,0
Dp Heating	kPa	5,1	7,3	9,6	12,4	13,2	10,2	15,3	20,7	28,3	33,6	8,1	28,9	48,9	78,3	108,0
Fan	W	20,0	34,0	57,0	101,0	136,0	29,0	55,0	98,0	173,0	277,0	10,4	29,5	79,7	218,2	461,4
Sound power (Lw)	dB(A)	44	51	57	63	64	48	56	61	67	70	32	48	59	67	72
Sound pressure (Lp) (1)	dB(A)	35	42	48	54	55	39	47	52	58	61	23	39	50	58	63

(1) The sound pressure levels are 9 dB (A) lower than the sound power levels, apply to the reverberant field of a 100 m^3 room and a reverberation time of 0.5 sec.

DIMENSIONS

VERTICAL INSTALLATION

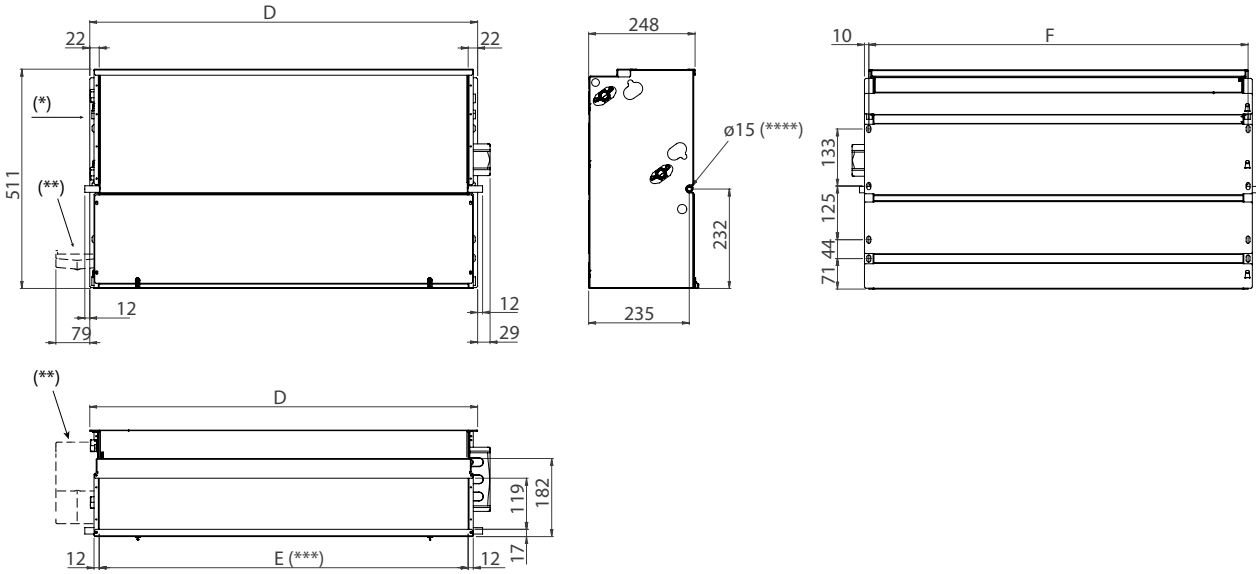

(*) = Hydraulic connections on the left
(**) = Auxiliary condensate tray (optional)
(***) = Supply frame dimension E x 119 mm
(****) = External diameter

HORIZONTAL INSTALLATION

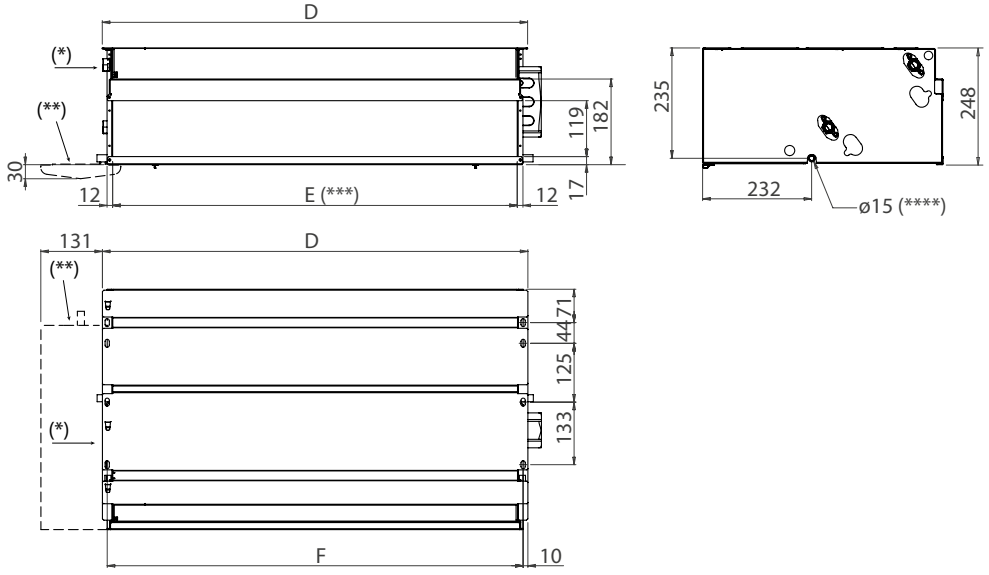

(*) = Hydraulic connections on the left
(**) = Auxiliary condensate tray (optional)
(***) = Supply frame dimension E x 119 mm
(****) = External diameter

MODEL		INALTO-ECM 0	INALTO-ECM 1	INALTO-ECM 2	INALTO-ECM 4	INALTO-ECM 7	INALTO-ECM 8
D	mm	474	689	904	1119	1549	1764
E	mm	430	645	860	1075	1505	1720
F	mm	454	669	884	1099	1529	1744

WEIGHT

Weight with packaging

MODEL		INALTO-ECM 0	INALTO-ECM 1	INALTO-ECM 2	INALTO-ECM 4	INALTO-ECM 7	INALTO-ECM 8
3 rows	kg	15,8	18,9	25,6	29,4	49,9	53,1
3+1 rows	kg	16,5	20,1	27,1	31,2	52,2	55,5
3+2 rows	kg	17,0	20,8	28,0	32,3	-	-
4 rows	kg	16,3	19,9	26,9	30,5	51,6	55,8
4+1 rows	kg	17,0	21,1	28,4	32,3	53,9	58,2

Weight without packaging

MODEL		INALTO-ECM 0	INALTO-ECM 1	INALTO-ECM 2	INALTO-ECM 4	INALTO-ECM 7	INALTO-ECM 8
3 rows	kg	13,8	17,9	24,6	26,4	44,9	48,9
3+1 rows	kg	14,5	19,1	26,1	28,2	47,2	51,3
3+2 rows	kg	15,0	19,8	27,0	29,3	-	-
4 rows	kg	14,3	18,9	25,9	27,5	46,6	51,6
4+1 rows	kg	15,0	20,1	27,4	29,3	48,9	54,0

redge

NEXT LEVEL
HVAC SOLUTIONS

redge

INALTO HPS
INALTO HPS- ECM

High Pressure - Ducted Fancoil Units

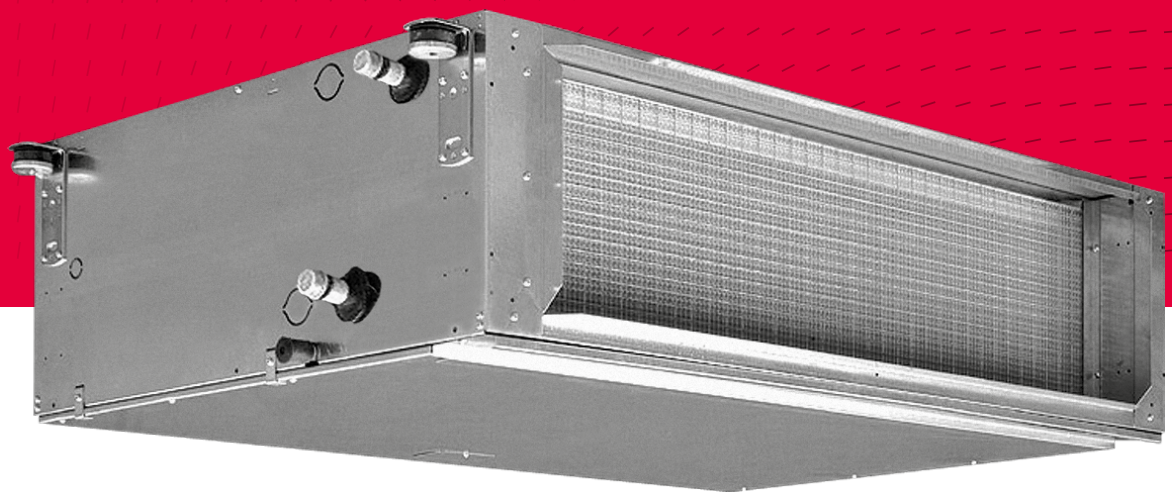

INALTO HPS	3	3	L
MODEL HPA - DUCTED HPS AC Motor HPE - DUCTED HPS EC Motor	**SIZE** 1 2 3 4 5 6 7 8	**COIL ROWS** 3 3+1 3+2 4 4+1 4+2 6 6+1 6+2	**HYDRAULIC CONNECTIONS** L - Left R - Right

INALTO HPS 1÷5 RANGE WITH AC ASYNCHRONOUS MOTOR

The fan coil units of the INALTO HPS range allow atvery economical cost to heat and/or cool all civil, industrial, commercial or sports premises.
They are designed and built for installation in the suspended ceilings, concealed or ducted.
The INALTO HPS 1÷5 sizes supply a consistent air flow with static pressure up to 160 Pa.
The INALTO HPS 1÷5 sizes can be equipped with a 3or 4 row coil or with two 3+1 or 4+1 row coils (special executions 3+2 or 4+2 are on demand).
The fan assembly has 5 speeds.
Compliant with Regulation (EU) No. 327/2011.

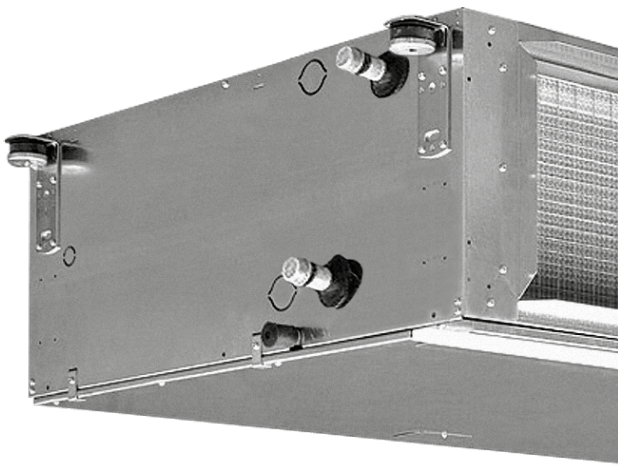

CASING

It is made with 1,0 mm galvanized steel for sizes 1-2-3 and with 1,2 mm galvanized steel for sizes 4-5, insulated with 10 mm polyolefin (PO) foam (B-s2-d0 EN 13501-1).

FAN ASSEMBLY

Consists of quiet centrifugal fans with two impellers and a directly driven single phase, five speed motor, 230 V 50 Hz, with capacitor, insulation class F.

COIL

It is manufactured from drawn copper tube and the aluminium fins are mechanically bonded onto the tube by an expansion process.
The INALTO HPS (sizes 1÷5) is available with the combination of either 3 or 4 row coils with the possibility to add a 1 or 2 row coil (3+1, 4+1, 3+2, 4+2 versions for 4 pipe systems).
The connections are on the left side looking from the air inlet of the unit
On request the connections can be moved to the other side.
The coil is not suitable for use in corrosive atmosphere or in environments where aluminium may be subject to corrosion.

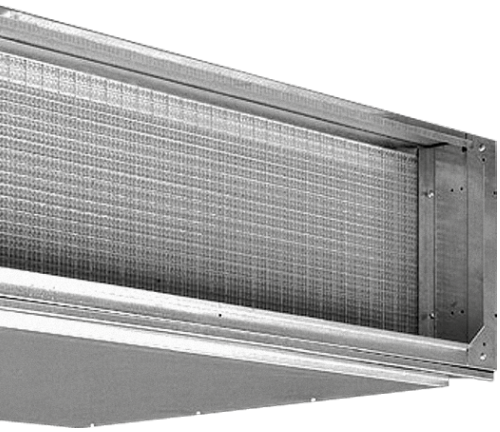

FILTER

The filter is made of polypropylene cellular fabric regenerating filter. The filter frame of galvanized steel is inserted into sliding guides fastened to the internal structure for easy insertion and removal of the filter.

CONDENSATE COLLECTION TRAY

It is made from galvanized steel insulated with 3 mm polyolefin (PO) foam (B-s2-d0 EN 13501-1).

3 ROW COIL - 2 PIPE UNITS

The following standard rating conditions are used:

COOLING

Entering air temperature: + 27 °C d.b. + 19 °C w.b.
Water temperature: +7 °C E.W.T. +12 °C L.W.T.

HEATING

Entering air temperature: + 20 °C
Water temperature: +60 °C E.W.T, +50 °C L.W.T.

Available pressure: 0 Pa

MODEL		INALTO HPS 13					INALTO HPS 23					INALTO HPS 33				
SPEED		1	2	3	4	5	1	2	3	4	5	1	2	3	4	5
Air flow	m^3/h	995	1140	1340	1640	1925	855	1165	1550	2060	2510	1815	2080	2300	2590	2790
Cooling total emission	kW	4,05	4,37	4,78	5,32	5,78	4,32	5,21	6,14	7,17	7,90	7,43	8,00	8,44	9,00	9,36
Cooling sensible emission	kW	3,42	3,77	4,24	4,90	5,49	3,29	4,13	5,08	6,23	7,12	6,02	6,62	7,10	7,73	8,16
Heating emission	kW	7,91	8,71	9,73	11,13	12,33	7,75	9,74	11,92	14,45	16,44	14,27	15,69	16,80	18,19	19,10
Dp Cooling	kPa	7,0	8,1	9,6	11,6	13,7	8,7	12,4	16,9	22,5	27,4	18,7	21,5	23,8	26,8	28,8
Dp Heating	kPa	4,8	5,8	7,1	9,1	11,0	5,1	7,8	11,4	16,4	20,9	12,3	14,6	16,6	19,3	21,1
Fan	W	136	154	175	210	240	180	225	273	320	340	390	430	470	509	523
Sound power (Lw)	dB(A)	46	49	52	55	59	47	53	57	60	64	58	60	62	64	66
Sound pressure (Lp) (1)	dB(A)	37	40	43	46	50	38	44	48	51	55	49	51	53	55	57

MODEL		INALTO HPS 43					INALTO HPS 53				
SPEED		1	2	3	4	5	1	2	3	4	5
Air flow	m^3/h	2265	2585	2855	3130	3400	2905	3275	3540	3975	4400
Cooling total emission	kW	9,63	10,34	10,91	11,46	11,91	12,67	13,51	14,07	14,99	15,79
Cooling sensible emission	kW	7,70	8,44	9,05	9,64	10,16	10,31	11,22	11,82	12,85	13,78
Heating emission	kW	18,06	19,82	21,21	22,56	23,65	23,64	25,71	27,14	29,35	31,42
Dp Cooling	kPa	18,4	21,2	23,5	25,7	28,0	17,2	19,6	21,2	23,9	26,5
Dp Heating	kPa	9,2	11,0	12,5	14,0	15,5	10,9	12,7	14,1	16,3	18,4
Fan	W	445	505	550	600	680	541	622	703	782	885
Sound power (Lw)	dB(A)	60	62	65	67	69	64	67	69	71	75
Sound pressure (Lp) (1)	dB(A)	51	53	56	58	60	55	58	60	62	66

(1) The sound pressure levels are 9 dB (A) lower than the sound power levels, apply to the reverberant field of a 100 m^3 room and a reverberation time of 0.5 sec.

4 ROW COIL - 2 PIPE UNITS

The following standard rating conditions are used:

COOLING

Entering air temperature: + 27 °C d.b. + 19 °C w.b.
Water temperature: +7 °C E.W.T. +12 °C L.W.T.

HEATING

Entering air temperature: + 20 °C
Water temperature: +60 °C E.W.T, +50 °C L.W.T.

Available pressure: 0 Pa

MODEL		INALTO HPS 14					INALTO HPS 24					INALTO HPS 34				
SPEED		1	2	3	4	5	1	2	3	4	5	1	2	3	4	5
Air flow	m^3/h	940	1115	1315	1575	1835	855	1160	1535	2005	2360	1795	2060	2265	2550	2745
Cooling total emission	kW	4,67	5,18	5,71	6,32	6,84	5,04	6,18	7,36	8,59	9,39	8,94	9,71	10,24	10,96	11,43
Cooling sensible emission	kW	3,72	4,23	4,79	5,47	6,09	3,70	4,70	5,82	7,08	7,95	6,90	7,63	8,17	8,91	9,40
Heating emission	kW	8,76	9,95	11,22	12,77	14,20	8,77	11,13	13,76	16,69	18,71	16,43	18,20	19,50	21,22	22,36
Dp Cooling	kPa	6,0	7,3	8,8	10,6	12,4	6,7	9,8	13,5	18,1	21,4	16,3	19,0	21,0	23,9	25,8
Dp Heating	kPa	3,9	4,9	6,1	7,8	9,5	3,7	5,8	8,6	12,3	15,2	9,9	12,0	13,7	16,1	17,7
Fan	W	130	151	173	204	232	180	222	268	320	340	380	426	464	505	520
Sound power (Lw)	dB(A)	46	49	52	55	59	47	53	57	60	64	58	60	62	64	66
Sound pressure (Lp) (1)	dB(A)	37	40	43	46	50	38	44	48	51	55	49	51	53	55	57

MODEL		INALTO HPS 44					INALTO HPS 54				
SPEED		1	2	3	4	5	1	2	3	4	5
Air flow	m^3/h	2245	2560	2820	3085	3340	2885	3240	3505	3920	4330
Cooling total emission	kW	11,47	12,40	13,12	13,81	14,38	14,99	16,07	16,80	17,95	18,93
Cooling sensible emission	kW	8,79	9,67	10,38	11,07	11,68	11,63	12,68	13,41	14,57	15,63
Heating emission	kW	20,86	23,02	24,69	26,36	27,90	27,08	29,56	31,31	33,96	36,49
Dp Cooling	kPa	14,6	16,9	18,8	20,8	22,6	13,5	15,4	16,8	19,0	21,2
Dp Heating	kPa	8,7	10,5	12,0	13,6	15,1	8,0	9,5	10,6	12,3	14,0
Fan	W	445	505	550	600	680	536	612	689	766	868
Sound power (Lw)	dB(A)	60	62	65	67	69	64	67	69	71	75
Sound pressure (Lp) (1)	dB(A)	51	53	56	58	60	55	58	60	62	66

(1) The sound pressure levels are 9 dB (A) lower than the sound power levels, apply to the reverberant field of a 100 m^3 room and a reverberation time of 0.5 sec.

4 ROW COIL - 4 PIPE UNITS

The following standard rating conditions are used:

COOLING

Entering air temperature: + 27 °C d.b. + 19 °C w.b.
Water temperature: +7 °C E.W.T. +12 °C L.W.T.

HEATING

Entering air temperature: + 20 °C
Water temperature: +45 °C E.W.T. +40 °C L.W.T.

MODEL		INALTO HPS 14			INALTO HPS 24			INALTO HPS 34			INALTO HPS 44			INALTO HPS 54		
SPEED		1	3	5	1	3	5	1	3	5	1	3	5	1	3	5
Air flow	m^3/h	790	1125	1410	840	1410	1825	1710	2075	2440	2070	2580	3020	2740	3280	3850
Available pressure	Pa	25	50	75	15	50	80	30	50	70	35	50	67	35	50	70
Cooling total emission	kW	4,17	5,21	5,92	4,99	7,01	8,15	8,71	9,76	10,71	10,90	12,40	13,60	14,54	16,19	17,76
Cooling sensible emission	kW	3,25	4,26	5,03	3,66	5,48	6,62	6,67	7,68	8,65	8,25	9,70	10,90	11,21	12,80	14,37
Heating emission	kW	4,98	6,44	7,67	5,57	8,27	10,10	10,20	11,80	13,19	12,79	14,92	16,53	17,67	20,32	22,93
Dp Cooling	kPa	5,1	7,6	9,6	6,9	12,7	16,8	16,0	19,8	23,4	13,9	17,7	20,9	13,3	16,3	19,4
Dp Heating	kPa	5,2	8,2	11,3	6,2	17,0	18,3	15,6	23,0	24,8	13,4	17,7	21,3	14,2	18,3	22,8
Fan	W	115	155	185	170	230	285	350	420	470	390	490	570	500	617	760
Sound power outlet (Lw)	dB(A)	44	52	58	44	56	61	57	62	65	59	63	66	63	67	70
Sound power inlet + radiated (Lw)	dB(A)	47	55	60	47	59	64	60	64	67	61	65	68	65	69	72
Sound pressure level outlet (Lp) (1)	dB(A)	35	43	49	35	47	52	48	53	56	50	54	57	54	58	61
Sound pressure level inlet + radiated (Lp) (1)	dB(A)	38	46	51	38	50	55	51	55	58	52	56	59	56	60	63
Plenum code		9034200	9034200	9034200	9034200	9034200	9034200	9034220	9034220	9034220	9034230	9034230	9034230	9034240	9034240	9034240

(1) The sound pressure levels are 9 dB (A) lower than the sound power levels, apply to the reverberant field of a 100 m^3 room and a reverberation time of 0.5 sec.

4+1 ROW COIL - 4 PIPE UNITS

The following standard rating conditions are used:

COOLING

Entering air temperature: + 27 °C d.b. + 19 °C w.b.
Water temperature: +7 °C E.W.T. +12 °C L.W.T.

HEATING

Entering air temperature: + 20 °C
Water temperature: +65 °C E.W.T. +55 °C L.W.T.

MODEL		INALTO HPS 14+1			INALTO HPS 24+1			INALTO HPS 34+1			INALTO HPS 44+1			INALTO HPS 54+1		
SPEED		1	3	5	1	3	5	1	3	5	1	3	5	1	3	5
Air flow	m^3/h	770	1090	1350	840	1390	1775	1680	2045	2390	2055	2545	2960	2700	3245	3800
Available pressure	Pa	25	50	75	15	50	80	30	50	70	35	50	67	35	50	70
Cooling total emission	kW	4,09	5,11	5,79	4,99	6,96	8,03	8,61	9,67	10,58	10,85	12,34	13,46	13,75	15,31	16,73
Cooling sensible emission	kW	3,18	4,16	4,87	3,66	5,42	6,49	6,58	7,60	8,51	8,21	9,61	10,72	10,62	12,13	13,56
Heating emission	kW	3,49	4,29	4,81	4,09	5,53	6,30	6,70	7,44	8,08	8,95	9,95	10,60	11,34	12,55	13,64
Dp Cooling	kPa	4,9	7,3	9,2	6,9	12,5	16,3	15,7	19,4	22,9	13,8	17,4	20,5	12,0	14,7	17,4
Dp Heating	kPa	9,8	14,2	17,5	12,0	20,8	26,3	12,9	15,6	18,1	24,6	29,9	33,9	27,4	32,9	38,4
Fan	W	115	155	185	170	230	285	350	420	470	390	490	570	500	617	760
Sound power outlet (Lw)	dB(A)	44	52	58	44	56	61	57	62	65	59	63	66	63	67	70
Sound power inlet + radiated (Lw)	dB(A)	47	55	60	47	59	64	60	64	67	61	65	68	65	69	72
Sound pressure level outlet (Lp) (1)	dB(A)	35	43	49	35	47	52	48	53	56	50	54	57	54	58	61
Sound pressure level inlet + radiated (Lp) (1)	dB(A)	38	46	51	38	50	55	51	55	58	52	56	59	56	60	63
Plenum code		9034200	9034200	9034200	9034200	9034200	9034200	9034220	9034220	9034220	9034230	9034230	9034230	9034240	9034240	9034240

(1) The sound pressure levels are 9 dB (A) lower than the sound power levels, apply to the reverberant field of a 100 m^3 room and a reverberation time of 0.5 sec.

3+1 ROW COIL - 4 PIPE UNITS

The following standard rating conditions are used:

COOLING

Entering air temperature: + 27 °C d.b. + 19 °C w.b.
Water temperature: +7 °C E.W.T. +12 °C L.W.T.

HEATING

Entering air temperature: + 20 °C
Water temperature: +70 °C E.W.T., +60 °C L.W.T.

Available pressure: 0 Pa

MODEL		INALTO HPS 13+1					INALTO HPS 23+1					INALTO HPS 33+1				
SPEED		1	2	3	4	5	1	2	3	4	5	1	2	3	4	5
Air flow	m^3/h	940	1115	1315	1575	1835	855	1160	1535	2005	2360	1795	2060	2265	2550	2745
Cooling total emission	kW	3,92	4,32	4,74	5,21	5,64	4,32	5,20	6,11	7,07	7,66	7,38	7,96	8,37	8,92	9,30
Cooling sensible emission	kW	3,28	3,71	4,18	4,76	5,30	3,29	4,12	5,05	6,11	6,83	5,97	6,58	7,03	7,64	8,07
Heating emission	kW	4,58	5,04	5,51	6,07	6,58	4,78	5,79	6,76	7,78	8,44	8,07	8,69	9,12	9,71	10,08
Dp Cooling	kPa	6,6	7,9	9,4	11,3	13,2	8,7	12,4	16,8	22,0	25,8	18,4	21,2	23,5	26,4	28,4
Dp Heating	kPa	13,7	16,4	19,2	23,0	26,5	15,9	22,4	29,8	38,6	44,8	18,4	21,0	23,0	25,7	27,5
Fan	W	130	151	173	204	232	180	222	268	320	340	380	426	464	505	520
Sound power (Lw)	dB(A)	46	49	52	55	59	47	53	57	60	64	58	60	62	64	66
Sound pressure (Lp) (1)	dB(A)	37	40	43	46	50	38	44	48	51	55	49	51	53	55	57

MODEL		INALTO HPS 43+1					INALTO HPS 53+1				
SPEED		1	2	3	4	5	1	2	3	4	5
Air flow	m^3/h	2245	2560	2820	3085	3340	2885	3240	3505	3920	4330
Cooling total emission	kW	9,58	10,29	10,84	11,36	11,80	12,61	13,46	14,01	14,88	15,63
Cooling sensible emission	kW	7,65	8,39	8,97	9,54	10,04	10,26	11,15	11,76	12,73	13,62
Heating emission	kW	10,53	11,32	11,93	12,50	13,04	13,42	14,30	14,92	15,85	16,73
Dp Cooling	kPa	18,3	21,0	23,2	25,4	27,5	17,1	19,3	21,0	23,5	26,1
Dp Heating	kPa	32,4	37,0	40,8	44,4	47,8	30,0	33,6	36,4	40,6	44,6
Fan	W	445	505	550	600	680	536	612	689	766	868
Sound power (Lw)	dB(A)	60	62	65	67	69	64	67	69	71	75
Sound pressure (Lp) (1)	dB(A)	51	53	56	58	60	55	58	60	62	66

(1) The sound pressure levels are 9 dB (A) lower than the sound power levels, apply to the reverberant field of a 100 m^3 room and a reverberation time of 0.5 sec.

4+1 ROW COIL - 4 PIPE UNITS

The following standard rating conditions are used:

COOLING

Entering air temperature: + 27 °C d.b. + 19 °C w.b.
Water temperature: +7 °C E.W.T. +12 °C L.W.T.

HEATING

Entering air temperature: + 20 °C
Water temperature: +70 °C E.W.T., +60 °C L.W.T.

Available pressure: 0 Pa

MODEL		INALTO HPS 14+1					INALTO HPS 24+1					INALTO HPS 34+1				
SPEED		1	2	3	4	5	1	2	3	4	5	1	2	3	4	5
Air flow	m^3/h	910	1090	1290	1530	1775	850	1155	1520	1965	2285	1780	2040	2235	2510	2700
Cooling total emission	kW	4,57	5,11	5,65	6,22	6,75	5,03	6,17	7,32	8,50	9,23	8,90	9,65	10,17	10,85	11,32
Cooling sensible emission	kW	3,62	4,16	4,72	5,35	5,96	3,69	4,69	5,77	6,97	7,77	6,86	7,58	8,10	8,80	9,29
Heating emission	kW	4,49	4,98	5,46	5,99	6,47	4,76	5,76	6,73	7,71	8,30	8,03	8,64	9,07	9,64	9,99
Dp Cooling	kPa	5,8	7,1	8,6	10,3	12,0	6,6	9,7	13,4	17,7	20,7	16,1	18,8	20,7	23,5	25,4
Dp Heating	kPa	15,3	18,4	21,8	25,7	29,6	15,7	22,3	29,6	37,7	43,5	18,2	20,8	22,7	25,3	27,1
Fan	W	127	149	170	199	226	176	218	262	310	330	375	422	458	499	515
Sound power (Lw)	dB(A)	46	49	52	55	59	47	53	57	60	64	58	60	62	64	66
Sound pressure (Lp) (1)	dB(A)	37	40	43	46	50	38	44	48	51	55	49	51	53	55	57

MODEL		INALTO HPS 44+1					INALTO HPS 54+1				
SPEED		1	2	3	4	5	1	2	3	4	5
Air flow	m^3/h	2225	2535	2790	3055	3295	2865	3210	3475	3875	4265
Cooling total emission	kW	11,42	12,34	13,04	13,74	14,29	14,93	15,98	16,74	17,83	18,80
Cooling sensible emission	kW	8,74	9,61	10,30	11,00	11,58	11,58	12,59	13,34	14,45	15,48
Heating emission	kW	10,50	11,27	11,86	12,44	12,95	13,37	14,25	14,85	15,77	16,58
Dp Cooling	kPa	14,5	16,7	18,6	20,6	22,3	13,4	15,2	16,7	18,8	20,9
Dp Heating	kPa	32,2	36,7	40,3	43,9	47,2	29,7	33,3	36,1	40,2	44,1
Fan	W	440	500	542	599	670	530	604	678	754	851
Sound power (Lw)	dB(A)	60	62	65	67	69	64	67	69	71	75
Sound pressure (Lp) (1)	dB(A)	51	53	56	58	60	55	58	60	62	66

(1) The sound pressure levels are 9 dB (A) lower than the sound power levels, apply to the reverberant field of a 100 m^3 room and a reverberation time of 0.5 sec.

4+2 ROW COIL - 4 PIPE UNITS

The following standard rating conditions are used:

COOLING

Entering air temperature: + 27 °C d.b. + 19 °C w.b.
Water temperature: +7 °C E.W.T. +12 °C L.W.T.

HEATING

Entering air temperature: + 20 °C
Water temperature: +70 °C E.W.T., +60 °C L.W.T.

Available pressure: 0 Pa

MODEL		INALTO HPS 14+2					INALTO HPS 24+2					INALTO HPS 34+2				
SPEED		1	2	3	4	5	1	2	3	4	5	1	2	3	4	5
Air flow	m^3/h	875	1055	1260	1470	1695	845	1145	1505	1910	2190	1765	2010	2195	2455	2645
Cooling total emission	kW	4,46	5,00	5,57	6,08	6,60	5,01	6,14	7,28	8,36	9,02	8,86	9,57	10,07	10,73	11,20
Cooling sensible emission	kW	3,51	4,05	4,63	5,19	5,78	3,67	4,67	5,74	6,83	7,54	6,82	7,50	7,99	8,67	9,16
Heating emission	kW	8,56	9,72	10,92	12,06	13,17	9,14	11,35	13,67	15,95	17,37	16,19	17,63	18,66	20,02	20,98
Dp Cooling	kPa	5,5	6,8	8,3	9,9	11,4	6,6	9,6	13,2	17,2	19,8	16,0	18,4	20,3	22,9	24,8
Dp Heating	kPa	13,2	16,7	20,8	24,8	29,3	12,3	18,4	26,1	34,6	40,6	18,0	21,2	23,5	26,8	29,2
Fan	W	124	145	168	193	218	173	212	257	310	330	369	414	449	489	507
Sound power (Lw)	dB(A)	46	49	52	55	59	47	53	57	60	64	58	60	62	64	66
Sound pressure (Lp) (1)	dB(A)	37	40	43	46	50	38	44	48	51	55	49	51	53	55	57

MODEL		INALTO HPS 44+2					INALTO HPS 54+2				
SPEED		1	2	3	4	5	1	2	3	4	5
Air flow	m^3/h	2205	2500	2745	3005	3230	2825	3165	3430	3810	4170
Cooling total emission	kW	11,36	12,24	12,92	13,60	14,14	14,83	15,87	16,62	17,64	18,55
Cooling sensible emission	kW	8,69	9,52	10,19	10,87	11,42	11,47	12,47	13,22	14,27	15,22
Heating emission	kW	20,93	22,77	24,21	25,66	26,87	26,37	28,46	29,97	32,07	33,94
Dp Cooling	kPa	14,3	16,5	18,3	20,2	21,8	13,2	15,0	16,4	18,5	20,4
Dp Heating	kPa	27,2	31,8	35,6	39,6	43,3	27,4	31,6	34,8	39,4	43,7
Fan	W	434	489	528	587	650	521	593	662	737	828
Sound power (Lw)	dB(A)	60	62	65	67	69	64	67	69	71	75
Sound pressure (Lp) (1)	dB(A)	51	53	56	58	60	55	58	60	62	66

(1) The sound pressure levels are 9 dB (A) lower than the sound power levels, apply to the reverberant field of a 100 m^3 room and a reverberation time of 0.5 sec.

DIMENSION, WEIGHT AND WATER CONTENT

LEFT CONFIGURATION (STANDARD)

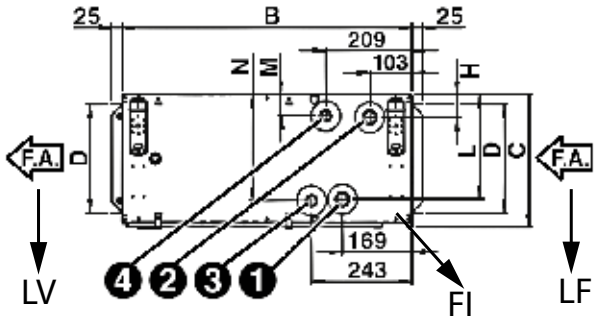

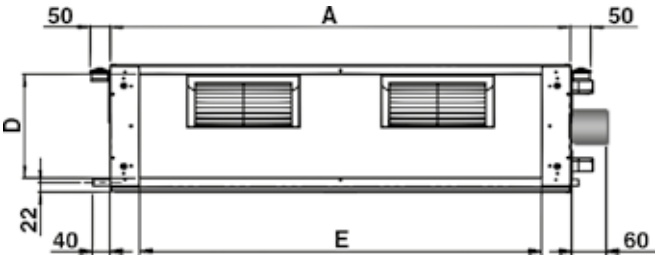

RIGHT CONFIGURATION (ON DEMAND)

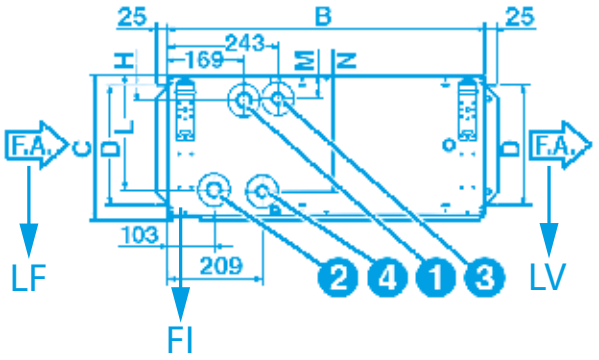

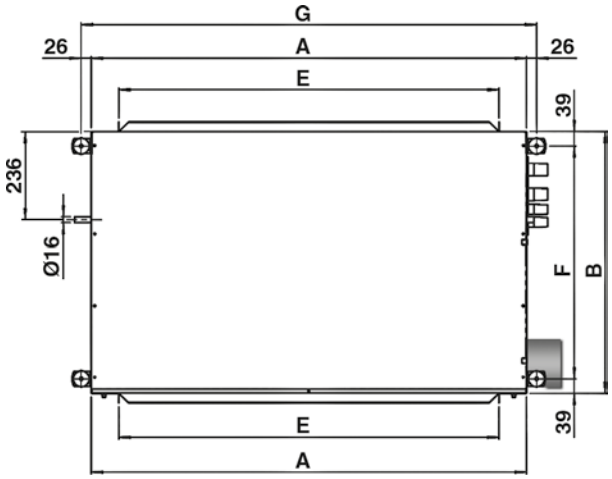

1 = main coil water inlet
2 = main coil water outlet
3 = additional coil water inlet
4 = additional coil water outlet
LV = fan side (outlet)
FI = filter
LF = filter side (inlet)
F.A. = air flow

STANDARD

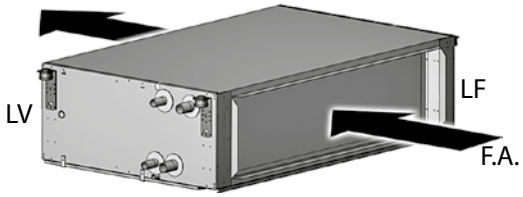

Coil connections on the left looking the air direction

WIRING TERMINAL BOARD

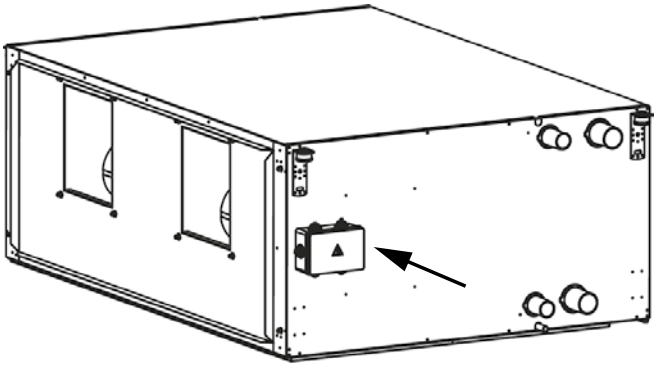

DIMENSIONS

MODEL		INALTO HPS 1	INALTO HPS 2	INALTO HPS 3	INALTO HPS 4	INALTO HPS 5
A	mm	1133	1133	1133	1445	1445
B	mm	698	698	698	853	853
C	mm	310	310	360	360	435
D	mm	255	255	305	293	368
E	mm	991	991	991	1302	1302
F	mm	620	620	620	775	775
G	mm	1185	1185	1185	1497	1497
H	mm	54	54	54	58	58
L	mm	245	245	295	291	367
M	mm	50	50	50	54	54
N	mm	249	249	299	295	370

redge

NEXT LEVEL HVAC SOLUTIONS

INALTO HPS	3	3	L
MODEL HPA - DUCTED HPS AC Motor HPE - DUCTED HPS EC Motor	**SIZE** 1 2 3 4 5 6 7 8	**COIL ROWS** 3 3+1 3+2 4 4+1 4+2 6 6+1 6+2	**HYDRAULIC CONNECTIONS** L - Left R - Right

INALTO HPS 6-7 RANGE WITH AC ASYNCHRONOUS MOTOR

The fan coil units of the INALTO HPS range allow at very economical cost to heat and/or cool all civil, industrial, commercial or sports premises.
They are designed and built for installation in the suspended ceilings, concealed or ducted.
The INALTO HPS 6-7 sizes supply a consistent air flow with static pressure up to 250 Pa.
The INALTO HPS 6-7 sizes can be equipped either with a 4 or 6 row coil or with two coils with 4+2 or 6+2 rows.
The fan assembly has 3 speeds.
Compliant with Regulation (EU) No. 327/2011.

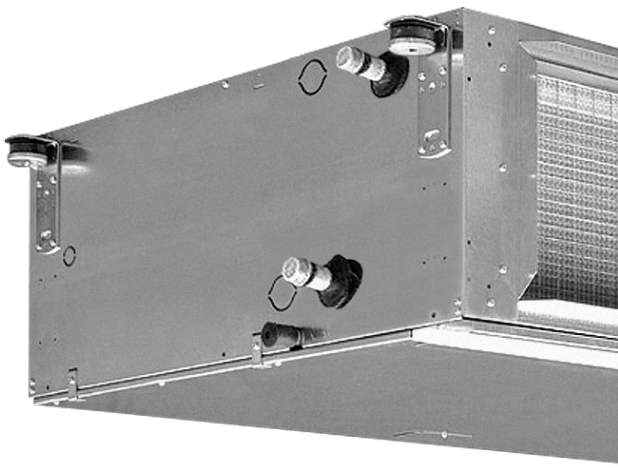

CASING

It is made with 1,2 mm galvanized steel for sizes 6-7, insulated with 10 mm polyolefin (PO) foam (B-s2-d0 EN 13501-1).

FAN ASSEMBLY

Consists of quiet centrifugal fans with two impellers and a directly driven single phase, three speed motor, 230 V 50 Hz, with external rotor, capacitor, insulation class F.

COIL

It is manufactured from drawn copper tube and the aluminium fins are mechanically bonded onto the tube by an expansion process.
The INALTO HPS (sizes 6÷7) is available with the combination of either 4 or 6 row coils with the possibility to add a 2 row coil (4+2, 6+2 versions for 4 pipe systems).
The connections are on the left side looking from the air inlet of the unit
On request the connections can be moved to the other side.
The coil is not suitable for use in corrosive atmosphere or in environments where aluminium may be subject to corrosion.

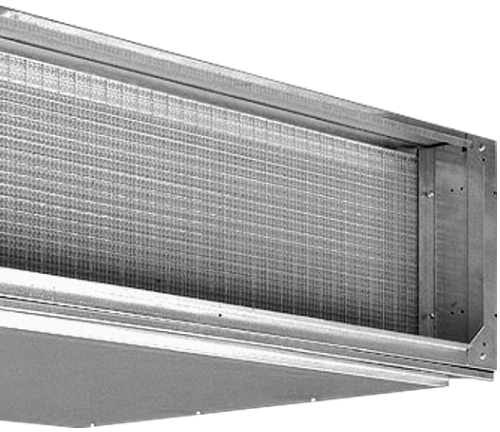

FILTER

The filter is made of polypropylene cellular fabric regenerating filter. The filter frame of galvanized steel is inserted into sliding guides fastened to the internal structure for easy insertion and removal of the filter.

CONDENSATE COLLECTION TRAY

It is made from galvanized steel insulated with 3 mm polyolefin (PO) foam (B-s2-d0 EN 13501-1).

4 AND 6 ROW COIL - 2 PIPE UNITS

The following standard rating conditions are used:

COOLING

Entering air temperature: + 27 °C d.b. + 19 °C w.b.
Water temperature: +7 °C E.W.T. +12 °C L.W.T.

HEATING

Entering air temperature: + 20 °C
Water temperature: +60 °C E.W.T, +50 °C L.W.T.

Available pressure: 0 Pa

MODEL		INALTO HPS 64			INALTO HPS 66			INALTO HPS 74			INALTO HPS 76		
SPEED		1	2	3	1	2	3	1	2	3	1	2	3
Air flow	m^3/h	2200	3580	5200	2190	3570	5170	3960	5210	7480	3960	5210	7435
Cooling total emission	kW	13,83	19,28	23,94	16,28	23,47	29,89	21,45	25,55	31,22	26,09	31,62	39,52
Cooling sensible emission	kW	9,99	14,64	18,98	11,25	16,90	22,32	16,04	19,66	25,14	18,44	23,02	29,94
Heating emission	kW	23,77	35,01	46,21	26,09	39,57	53,27	39,61	48,83	63,38	44,57	55,84	73,68
Dp Cooling	kPa	9,0	16,4	24,6	11,6	22,2	34,8	14,6	19,8	29,1	18,6	26,1	39,5
Dp Heating	kPa	4,9	9,9	16,3	5,7	12,1	20,6	8,6	12,5	20,0	9,9	14,8	24,4
Fan	W	732	943	1437	715	933	1414	1666	1879	2803	1666	1879	2764
Sound power (Lw)	dB(A)	61	69	76	61	69	76	68	74	81	68	74	81
Sound pressure (Lp) (1)	dB(A)	52	60	67	52	60	67	59	65	72	59	65	72

(1) The sound pressure levels are 9 dB (A) lower than the sound power levels, apply to the reverberant field of a 100 m^3 room and a reverberation time of 0.5 sec.

Available pressure: 150 Pa

MODEL		INALTO HPS 64			INALTO HPS 66			INALTO HPS 74			INALTO HPS 76		
SPEED		1	2	3	1	2	3	1	2	3	1	2	3
Air flow	m^3/h	1880	3385	4800	1860	3350	4740	3925	5070	7100	3920	5050	7030
Cooling total emission	kW	12,42	18,73	22,89	14,36	22,59	28,28	21,54	25,33	30,63	26,09	31,17	38,42
Cooling sensible emission	kW	8,88	14,16	17,98	9,84	16,20	20,91	16,05	19,46	24,53	18,49	22,66	28,96
Heating emission	kW	20,86	33,52	43,60	22,58	37,53	49,77	39,34	47,85	61,14	44,20	54,45	70,64
Dp Cooling	kPa	7,4	15,3	22,6	9,2	20,5	31,4	14,4	19,3	27,6	18,3	25,1	37,1
Dp Heating	kPa	3,9	9,1	14,7	4,4	11,0	18,2	8,5	12,1	18,8	9,7	14,2	22,6
Fan	W	570	788	1191	565	771	1163	1610	1738	2502	1605	1720	2452
Sound power (Lw)	dB(A)	63	71	77	63	71	77	71	75	81	71	75	81
Sound pressure (Lp) (1)	dB(A)	54	62	68	54	62	68	62	66	72	62	66	72

(1) The sound pressure levels are 9 dB (A) lower than the sound power levels, apply to the reverberant field of a 100 m^3 room and a reverberation time of 0.5 sec.

4+2 AND 6+2 ROW COIL - 4 PIPE UNITS

The following standard rating conditions are used:

COOLING

Entering air temperature: + 27 °C d.b. + 19 °C w.b.
Water temperature: +7 °C E.W.T. +12 °C L.W.T.

HEATING

Entering air temperature: + 20 °C
Water temperature: +70 °C E.W.T., +60 °C L.W.T.

Available pressure: 0 Pa

MODEL		INALTO HPS 64+2			INALTO HPS 66+2			INALTO HPS 74+2			INALTO HPS 76+2		
SPEED		1	2	3	1	2	3	1	2	3	1	2	3
Air flow	m^3/h	2190	3570	5150	2180	3570	5125	3960	5210	7410	3960	5210	7355
Cooling total emission	kW	13,80	19,24	23,81	16,21	23,47	29,75	21,45	25,55	31,16	26,09	31,62	39,28
Cooling sensible emission	kW	9,97	14,61	18,87	11,20	16,90	22,20	15,95	19,66	25,06	18,44	23,02	29,73
Heating emission	kW	22,28	31,16	39,42	22,21	31,16	39,27	35,74	42,78	53,25	35,74	42,78	52,98
Dp Cooling	kPa	9,0	16,3	24,3	11,5	22,2	34,4	14,6	19,8	28,9	18,6	26,1	38,9
Dp Heating	kPa	14,7	27,0	41,2	14,7	27,0	40,9	24,1	33,3	49,3	24,1	33,3	48,9
Fan	W	715	933	1400	708	933	1382	1666	1879	2743	1666	1879	2698
Sound power (Lw)	dB(A)	61	69	76	61	69	76	68	74	81	68	74	81
Sound pressure (Lp) (1)	dB(A)	52	60	67	52	60	67	59	65	72	59	65	72

(1) The sound pressure levels are 9 dB (A) lower than the sound power levels, apply to the reverberant field of a 100 m^3 room and a reverberation time of 0.5 sec.

Available pressure: 150 Pa

MODEL		INALTO HPS 64+2			INALTO HPS 66+2			INALTO HPS 74+2			INALTO HPS 76+2		
SPEED		1	2	3	1	2	3	1	2	3	1	2	3
Air flow	m^3/h	1860	3330	4680	1850	3300	4600	3920	5040	6980	3910	5000	6900
Cooling total emission	kW	12,33	18,56	22,52	14,10	22,04	27,53	21,53	25,25	30,36	26,08	30,98	38,04
Cooling sensible emission	kW	8,81	14,02	17,62	9,59	15,70	20,26	16,05	19,39	24,28	18,48	22,51	28,62
Heating emission	kW	19,81	29,78	37,13	19,73	29,59	36,76	35,50	41,88	51,31	35,41	41,68	50,95
Dp Cooling	kPa	7,3	15,0	22,0	9,1	20,1	30,3	14,4	19,1	27,1	18,3	24,8	36,3
Dp Heating	kPa	11,9	24,9	37,0	11,8	24,6	36,3	23,8	32,0	46,1	23,7	31,7	45,5
Fan	W	565	762	1137	560	749	1105	1605	1710	2417	1587	1677	2364
Sound power (Lw)	dB(A)	63	71	77	63	71	77	71	75	81	71	75	81
Sound pressure (Lp) (1)	dB(A)	54	62	68	54	62	68	62	66	72	62	66	72

(1) The sound pressure levels are 9 dB (A) lower than the sound power levels, apply to the reverberant field of a 100 m^3 room and a reverberation time of 0.5 sec.

DIMENSION, WEIGHT AND WATER CONTENT

LEFT CONFIGURATION (STANDARD)

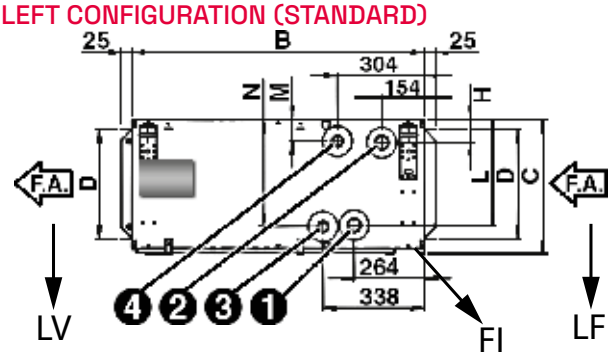

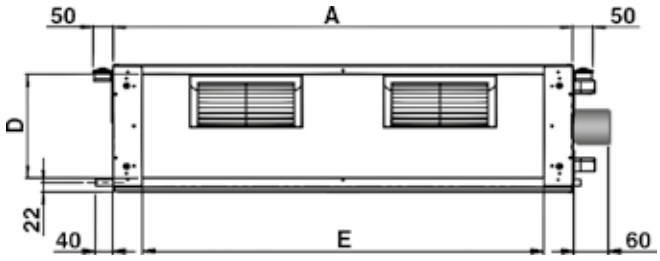

RIGHT CONFIGURATION (ON DEMAND)

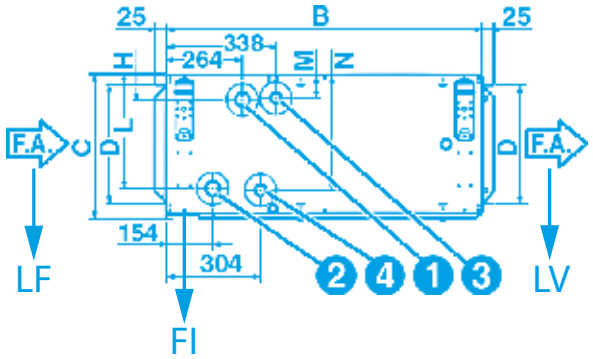

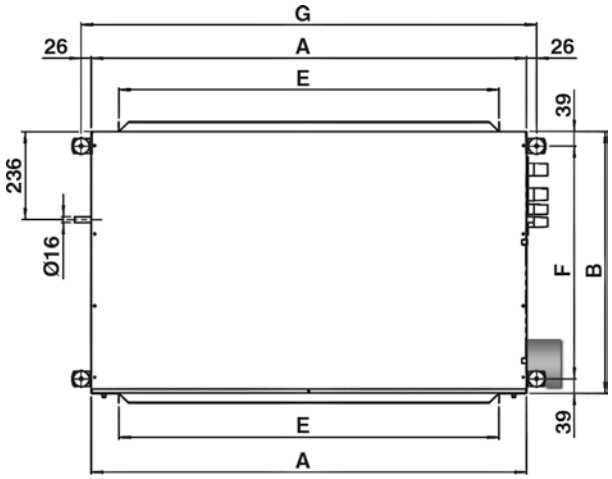

1 = main coil water inlet
2 = main coil water outlet
3 = additional coil water inlet
4 = additional coil water outlet
LV = fan side (outlet)
FI = filter
LF = filter side (inlet)
F.A. = air flow

STANDARD



Coil connections on the left looking the air direction

WIRING TERMINAL BOARD

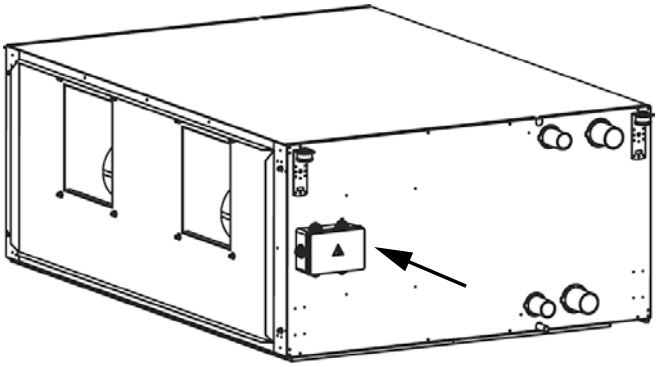

DIMENSIONS

MODEL		INALTO HPS 6	INALTO HPS 7
A	mm	1535	1535
B	mm	1100	1100
C	mm	488	588
D	mm	421	521
E	mm	1393	1393
F	mm	1022	1022
G	mm	1587	1587
H	mm	59	59
L	mm	416	516
M	mm	55	55
N	mm	421	521

COIL CONNECTIONS

MODEL	POS.	INALTO HPS 6	INALTO HPS 7
Main coil inlet	1	1 1/4"	1 1/4"
Main coil outlet	2	1 1/4"	1 1/4"
Additional coil inlet	3	1"	1"
Additional coil outlet	4	1"	1"

PACKED UNIT

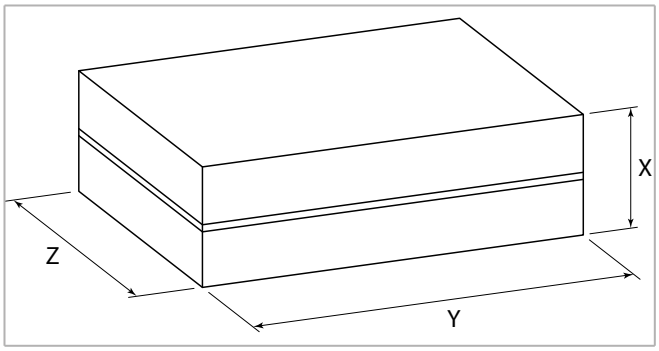

MODEL		INALTO HPS 6	INALTO HPS 7
X	mm	505	605
Y	mm	1695	
Z	mm	1207	

WEIGHT (KG)

Weight without packaging

MODEL	INALTO HPS 6	INALTO HPS 7
4 rows	124	140
4+2 rows	134	152
6 rows	130	148
6+2 rows	140	160

Weight with packaging

MODEL	INALTO HPS 6	INALTO HPS 7
4 rows	127	143
4+2 rows	137	155
6 rows	133	151
6+2 rows	143	163

INALTO HPS	3	3	L
MODEL HPA - DUCTED HPS AC Motor HPE - DUCTED HPS EC Motor	**SIZE** 1 2 3 4 5 6 7 8	**COIL ROWS** 3 3+1 3+2 4 4+1 4+2 6 6+1 6+2	**HYDRAULIC CONNECTIONS** L - Left R - Right

INALTO HPS-ECM 1÷6 RANGE WITH ELECTRONIC MOTOR AND INVERTER BOARD

The fan coil units of the INALTO HPS-ECM range allow at very economical cost to heat and/or cool all civil, industrial, commercial or sports premises.
They are designed and built for installation in the suspended ceilings, concealed or ducted.
The INALTO HPS-ECM units supply a consistent air flow with static pressure up to 160 Pa for the sizes 1÷5 and 240 Pa for the size 6.
The INALTO HPS-ECM 1÷5 sizes can be equipped with a 3 or 4 row coil or with two 3+1 or 4+1 row coils (special executions 3+2 or 4+2 are on demand).
The INALTO HPS-ECM 6 size can be equipped either with a 4 or 6 row coil or with two coils with 4+2 or 6+2 rows.

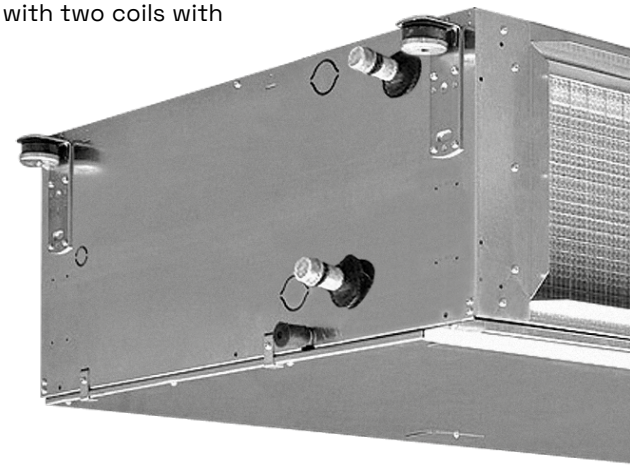

CASING

It is made with 1,0 mm galvanized steel for sizes 1 - 2 - 3 and with 1,2 mm galvanized steel for sizes 4 - 5 - 6, insulated with 10 mm polyolefin (PO) foam (B-s2-d0 EN 13501-1).

FAN ASSEMBLY

Consists of quiet centrifugal fans with two impellers directly driven to the motor.

COIL

It is manufactured from drawn copper tube and the aluminium fins are mechanically bonded onto the tube by an expansion process.
The sizes 1÷5 can be equipped also with the combination of either 1 or 2 additional row coil (versions 3+1, 4+1, 3+2, 4+2 for 4 pipe installation systems). Whereas the size 6 can be equipped with an additional coil with 2 rows (version 4+2 and 6+2 for 4 pipe installation systems).
The connections are on the left side looking from the air inlet of the unit
On request the connections can be moved to the other side. The coil is not suitable for use in corrosive atmosphere or in environments where aluminium may be subject to corrosion.

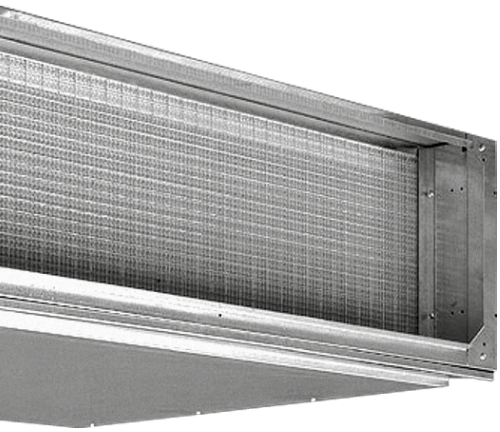

ELECTRONIC MOTOR

Three phase permanent magnet brushless electronic motor that is controlled with current reconstructed according to a BLAC sinusoidal wave.
The inverter board that controls the motor operation is powered by 230 Volt, single-phase and, with a switching system, it generates a three-phase frequency modulated, wave form power supply.
The electric power supply required for the machine is therefore single-phase with voltage of 230 V and frequency of 50 - 60 Hz.

CONDENSATE COLLECTION TRAY

It is made from galvanized steel insulated with 3 mm polyolefin (PO) foam (B-s2-d0 EN 13501-1).

4 AND 6 ROW COIL UNIT

The following standard rating conditions are used:

COOLING

Entering air temperature: + 27 °C d.b. + 19 °C w.b.
Water temperature: +7 °C E.W.T. +12 °C L.W.T.

HEATING

Entering air temperature: + 20 °C
Water temperature: +45 °C E.W.T. +40 °C L.W.T.

MODEL		INALTO HPS-ECM 14			INALTO HPS-ECM 24			INALTO HPS-ECM 34			INALTO HPS-ECM 44		
INVERTER SPEED SIGNAL (VDC)		4,5	7	9	4	6	8	4,5	6,5	8	5,5	7,5	10
		MIN	MED	MAX	MIN	MED	MAX	MIN	MED	MAX	MIN	MED	MAX
Air flow	m^3/h	780	1100	1310	940	1360	1780	1380	1950	2390	1840	2440	3080
Available pressure	Pa	26	50	70	24	50	85	25	50	75	28	50	80
Cooling total emission	kW	4,14	5,11	5,61	5,44	6,86	7,94	7,87	9,70	10,81	10,47	12,39	13,99
Cooling sensible emission	kW	3,24	4,18	4,72	4,08	5,36	6,44	5,93	7,61	8,72	7,90	9,65	11,23
Heating emission	kW	5,18	6,80	7,76	6,42	8,64	10,62	8,64	11,25	13,06	12,13	15,15	18,08
Dp Cooling	kPa	4,9	7,2	8,7	7,7	11,8	15,8	11,7	17,4	21,6	12,2	16,9	21,7
Dp Heating	kPa	6,5	10,7	13,7	7,5	12,9	18,8	10,1	16,4	21,4	11,6	17,4	23,9
Fan	W	40	88	144	44	110	225	80	195	340	110	253	530
Sound power outlet (Lw)	dB(A)	45	52	59	45	55	61	52	60	64	55	62	67
Sound power inlet + radiated (Lw)	dB(A)	48	55	61	48	57	63	55	62	66	58	64	69
Sound pressure level outlet (Lp) (1)	dB(A)	36	43	50	36	46	52	43	51	55	46	53	58
Sound pressure level inlet + radiated (Lp) (1)	dB(A)	39	46	52	39	48	54	46	53	57	49	55	60
Plenum code		9034200	9034200	9034200	9034200	9034200	9034200	9034220	9034220	9034220	9034230	9034230	9034230

MODEL		INALTO HPS-ECM 54			INALTO HPS-ECM 64			INALTO HPS-ECM 66		
INVERTER SPEED SIGNAL (VDC)		3	5	7	3	6	9	3	6	9
		MIN	MED	MAX	MIN	MED	MAX	MIN	MED	MAX
Air flow	m^3/h	2400	3320	3920	2825	4295	5205	2825	4295	5205
Available pressure	Pa	25	50	70	22	50	74	22	50	74
Cooling total emission	kW	13,73	16,70	18,17	16,91	21,91	24,30	20,36	27,20	30,64
Cooling sensible emission	kW	10,46	13,26	14,75	12,85	17,79	20,30	14,47	20,39	23,48
Heating emission	kW	15,90	20,51	23,25	18,63	25,83	29,76	20,74	29,57	34,54
Dp Cooling	kPa	12,3	17,9	21,4	15,9	25,9	31,8	21,3	36,6	46,1
Dp Heating	kPa	12,8	20,3	25,4	14,2	25,6	33,1	16,7	31,7	42,0
Fan	W	166	383	702	106	330	636	109	339	654
Sound power outlet (Lw)	dB(A)	58	67	71	57	69	73	57	69	73
Sound power inlet + radiated (Lw)	dB(A)	61	70	73	60	72	75	60	72	75
Sound pressure level outlet (Lp) (1)	dB(A)	49	58	62	48	60	64	48	60	64
Sound pressure level inlet + radiated (Lp) (1)	dB(A)	52	61	64	51	63	66	51	63	66
Plenum code		9034240	9034240	9034240	9034280	9034280	9034280	9034280	9034280	9034280

(1) The sound pressure levels are 9 dB (A) lower than the sound power levels, apply to the reverberant field of a 100 m^3 room and a reverberation time of 0.5 sec.

4 AND 6 ROW COIL UNIT WITH 1 OR 2 ADDITIONAL ROW COIL

The following standard rating conditions are used:

COOLING

Entering air temperature: + 27 °C d.b. + 19 °C w.b.
Water temperature: +7 °C E.W.T. +12 °C L.W.T.

HEATING

Entering air temperature: + 20 °C
Water temperature: +65 °C E.W.T. +55 °C L.W.T.

MODEL		INALTO HPS-ECM 14+1			INALTO HPS-ECM 24+1			INALTO HPS-ECM 34+1			INALTO HPS-ECM 44+1		
INVERTER SPEED SIGNAL (VDC)		4,5	7	9	4	6	8	4,5	6,5	8	5,5	7,5	10
		MIN	MED	MAX	MIN	MED	MAX	MIN	MED	MAX	MIN	MED	MAX
Air flow	m^3/h	750	1040	1250	920	1340	1750	1350	1920	2350	1810	2400	3040
Available pressure	Pa	26	50	72	24	50	85	25	50	75	28	50	80
Cooling total emission	kW	4,04	4,94	5,46	5,36	6,79	7,87	7,76	9,59	10,70	10,36	12,27	13,90
Cooling sensible emission	kW	3,14	4,01	4,55	4,01	5,30	6,35	5,83	7,51	8,61	7,79	9,53	11,13
Heating emission	kW	3,43	4,18	4,62	4,33	5,42	6,25	5,90	7,20	8,02	8,06	9,48	10,75
Dp Cooling	kPa	4,6	6,8	8,3	7,5	11,6	15,5	11,4	17,1	21,2	12,0	16,6	21,4
Dp Heating	kPa	9,4	13,4	16,0	13,6	20,4	26,4	9,9	14,3	17,3	19,6	26,3	33,0
Fan	W	40	88	144	44	115	225	80	200	340	110	253	530
Sound power outlet (Lw)	dB(A)	45	52	59	45	55	61	52	60	64	55	62	67
Sound power inlet + radiated (Lw)	dB(A)	48	55	61	48	57	63	55	62	66	58	64	69
Sound pressure level outlet (Lp) (1)	dB(A)	36	43	50	36	46	52	43	51	55	46	53	58
Sound pressure level inlet + radiated (Lp) (1)	dB(A)	39	46	52	39	48	54	46	53	57	49	55	60
Plenum code		9034200	9034200	9034200	9034200	9034200	9034200	9034220	9034220	9034220	9034230	9034230	9034230

MODEL		INALTO HPS-ECM 54+1			INALTO HPS-ECM 64+2			INALTO HPS-ECM 66+2		
INVERTER SPEED SIGNAL (VDC)		3	5	7	3	6	9	3	6	9
		MIN	MED	MAX	MIN	MED	MAX	MIN	MED	MAX
Air flow	m^3/h	2380	3300	3860	2790	4235	5140	2750	4190	5090
Available pressure	Pa	26	50	68	21	50	73	22	50	74
Cooling total emission	kW	13,66	16,62	18,00	16,77	21,71	24,10	20,08	26,91	30,34
Cooling sensible emission	kW	10,39	13,19	14,58	12,72	17,59	20,09	14,26	20,13	23,20
Heating emission	kW	10,53	12,67	13,77	23,20	30,58	34,54	22,98	30,38	34,35
Dp Cooling	kPa	11,2	16,3	19,4	15,7	25,4	31,4	20,8	35,9	45,4
Dp Heating	kPa	18,5	25,7	29,9	20,1	33,2	41,3	19,8	32,8	40,8
Fan	W	168	384	695	110	343	661	115	352	678
Sound power outlet (Lw)	dB(A)	58	67	71	57	69	73	57	69	73
Sound power inlet + radiated (Lw)	dB(A)	61	70	73	60	72	75	60	72	75
Sound pressure level outlet (Lp) (1)	dB(A)	49	58	62	48	60	64	48	60	64
Sound pressure level inlet + radiated (Lp) (1)	dB(A)	52	61	64	51	63	66	51	63	66
Plenum code		9034240	9034240	9034240	9034280	9034280	9034280	9034280	9034280	9034280

(1) The sound pressure levels are 9 dB (A) lower than the sound power levels, apply to the reverberant field of a 100 m^3 room and a reverberation time of 0.5 sec.

MAIN PERFORMANCES AND TECHNICAL CHARACTERISTICS

3 ROW COIL - 2 PIPE UNITS

The following standard rating conditions are used:

COOLING

Entering air temperature: + 27 °C d.b. + 19 °C w.b.
Water temperature: +7 °C E.W.T. +12 °C L.W.T.

HEATING

Entering air temperature: + 20 °C
Water temperature: +45 °C E.W.T. +40 °C L.W.T.

Available pressure: 0 Pa

MODEL		INALTO HPS-ECM 13					INALTO HPS-ECM 23					INALTO HPS-ECM 33				
INVERTER SPEED SIGNAL (VDC)		1	3	5	7,5	10	1	3	5	7,5	10	1	3	5	7,5	10
Air flow	m^3/h	505	950	1280	1580	1800	640	970	1375	2030	2625	760	1190	1750	2565	3390
Cooling total emission	kW	3,00	4,05	4,78	5,33	5,69	3,70	4,82	5,91	7,22	8,12	4,54	6,05	7,57	9,21	10,41
Cooling sensible emission	kW	2,37	3,44	4,22	4,88	5,33	2,78	3,79	4,83	6,27	7,38	3,36	4,71	6,16	7,94	9,42
Heating emission	kW	3,42	4,93	6,08	7,01	7,63	3,97	5,46	7,05	9,23	10,92	4,75	6,71	8,89	11,57	13,88
Dp Cooling	kPa	4,5	7,8	10,7	13,1	14,9	6,4	10,4	15,1	22,3	28,6	6,6	11,1	16,9	24,8	32,4
Dp Heating	kPa	4,3	8,3	12,1	15,7	18,3	5,4	9,6	15,2	24,8	33,6	5,3	9,9	16,5	26,6	36,9
Fan	W	10	27	57	94	148	12	29	65	188	362	13	30	83	256	531
Sound power (Lw)	dB(A)	35,0	44,0	49,0	56,0	60,0	39,0	46,0	53,0	61,0	69,0	41,0	48,0	56,0	64,0	70,0
Sound pressure (Lp) (1)	dB(A)	26,0	35,0	40,0	47,0	51,0	30,0	37,0	44,0	52,0	60,0	32,0	39,0	47,0	55,0	61,0

MODEL		INALTO HPS-ECM 43					INALTO HPS-ECM 53				
INVERTER SPEED SIGNAL (VDC)		1	3	5	7,5	10	1	3	5	7,5	10
Air flow	m^3/h	745	1275	1890	2730	3535	1495	2605	3580	4400	5160
Cooling total emission	kW	4,83	6,99	8,89	10,84	12,26	8,60	12,13	14,37	15,83	16,90
Cooling sensible emission	kW	3,48	5,29	7,01	8,98	10,56	6,52	9,93	12,16	13,86	15,22
Heating emission	kW	5,17	8,01	10,84	14,15	16,91	9,71	14,92	18,77	21,62	24,04
Dp Cooling	kPa	5,0	9,8	15,3	22,4	28,9	8,8	16,6	23,2	28,4	33,2
Dp Heating	kPa	3,2	7,2	12,4	20,2	27,8	8,8	19,3	29,2	37,8	45,9
Fan	W	12	30	76	219	484	41	139	340	636	1020
Sound power (Lw)	dB(A)	39,0	48,0	56,0	64,0	69,0	48,0	61,0	70,0	75,0	79,0
Sound pressure (Lp) (1)	dB(A)	30,0	39,0	47,0	55,0	60,0	39,0	52,0	61,0	66,0	70,0

(1) The sound pressure levels are 9 dB(A) lower than the sound power levels, apply to the reverberant field of a 100 m^3 room and a reverberation time of 0.5 sec.

4 ROW COIL - 2 PIPE UNITS

The following standard rating conditions are used:

COOLING

Entering air temperature: + 27 °C d.b. + 19 °C w.b.
Water temperature: +7 °C E.W.T. +12 °C L.W.T.

HEATING

Entering air temperature: + 20 °C
Water temperature: +45 °C E.W.T. +40 °C L.W.T.

Available pressure: 0 Pa

MODEL		INALTO HPS-ECM 14					INALTO HPS-ECM 24					INALTO HPS-ECM 34				
INVERTER SPEED SIGNAL (VDC)		1	3	5	7,5	10	1	3	5	7,5	10	1	3	5	7,5	10
Air flow	m^3/h	460	870	1190	1520	1750	620	930	1345	1980	2580	740	1170	1720	2525	3290
Cooling total emission	kW	2,90	4,46	5,39	6,17	6,64	4,09	5,42	6,85	8,50	9,67	5,13	7,09	9,08	11,24	12,79
Cooling sensible emission	kW	2,16	3,57	4,47	5,32	5,86	2,97	4,09	5,36	7,02	8,32	3,67	5,29	7,03	9,16	10,87
Heating emission	kW	3,33	5,65	7,22	8,67	9,59	4,51	6,36	8,56	11,48	13,90	5,19	7,57	10,23	13,59	16,36
Dp Cooling	kPa	2,5	5,5	7,8	10,1	11,6	4,5	7,6	11,7	17,6	23,0	5,3	9,6	15,1	22,9	29,9
Dp Heating	kPa	2,4	6,2	9,7	13,5	16,2	4,0	7,4	12,7	21,7	30,6	4,0	8,0	13,8	23,1	32,2
Fan	W	10	26	55	104	154	12	25	65	183	371	13	30	85	264	541
Sound power (Lw)	dB(A)	35,0	44,0	49,0	56,0	60,0	39,0	46,0	53,0	61,0	69,0	41,0	48,0	56,0	64,0	70,0
Sound pressure (Lp) (1)	dB(A)	26,0	35,0	40,0	47,0	51,0	30,0	37,0	44,0	52,0	60,0	32,0	39,0	47,0	55,0	61,0

MODEL		INALTO HPS-ECM 44					INALTO HPS-ECM 54					INALTO HPS-ECM 64				
INVERTER SPEED SIGNAL (VDC)		1	3	5	7,5	10	1	3	5	7,5	10	1	3	5	7,5	10
Air flow	m^3/h	730	1250	1860	2690	3475	1480	2580	3550	4355	5095	1740	2900	3965	4940	5945
Cooling total emission	kW	5,39	8,09	10,58	13,18	15,06	9,89	14,43	17,43	19,41	20,88	12,05	17,22	20,95	23,74	26,11
Cooling sensible emission	kW	3,78	5,91	7,99	10,42	12,33	7,21	11,24	14,00	16,07	17,73	8,68	13,29	16,83	19,69	22,31
Heating emission	kW	5,53	8,81	12,24	16,33	19,76	10,64	16,85	21,58	25,12	28,13	12,47	19,03	24,31	28,65	32,77
Dp Cooling	kPa	3,6	7,5	12,3	18,8	24,6	6,7	13,5	19,3	23,9	28,1	8,5	16,4	23,6	30,1	36,5
Dp Heating	kPa	2,8	6,5	11,8	19,9	28,1	6,2	14,2	22,2	29,2	35,9	6,8	14,7	22,9	30,9	39,4
Fan	W	12	30	78	226	505	41	144	346	644	1031	28	93	214	442	816
Sound power (Lw)	dB(A)	39,0	48,0	56,0	64,0	69,0	48,0	61,0	70,0	75,0	79,0	47,5	62,0	70,0	74,5	78,0
Sound pressure (Lp) (1)	dB(A)	30,0	39,0	47,0	55,0	60,0	39,0	52,0	61,0	66,0	70,0	38,5	53,0	61,0	65,5	69,0

(1) The sound pressure levels are 9 dB(A) lower than the sound power levels, apply to the reverberant field of a 100 m^3 room and a reverberation time of 0.5 sec.

6 ROW COIL - 2 PIPE UNITS

The following standard rating conditions are used:

COOLING

Entering air temperature: + 27 °C d.b. + 19 °C w.b.
Water temperature: +7 °C E.W.T. +12 °C L.W.T.

HEATING

Entering air temperature: + 20 °C
Water temperature: +45 °C E.W.T. +40 °C L.W.T.

MODEL		INALTO HPS-ECM 66				
INVERTER SPEED SIGNAL (VDC)		1	3	5	7,5	10
Air flow	m^3/h	1725	2880	3940	4910	5905
Cooling total emission	kW	14,00	20,80	25,92	29,83	33,24
Cooling sensible emission	kW	9,58	15,02	19,28	22,75	25,94
Heating emission	kW	13,37	21,04	27,39	32,73	37,81
Dp Cooling	kPa	10,7	22,2	33,3	43,5	53,8
Dp Heating	kPa	7,5	17,1	27,6	38,2	49,6
Fan	W	28	97	222	453	839
Sound power (Lw)	dB(A)	47,5	62,0	70,0	74,5	78,0
Sound pressure (Lp) (1)	dB(A)	38,5	53,0	61,0	65,5	69,0

(1) The sound pressure levels are 9 dB(A) lower than the sound power levels, apply to the reverberant field of a 100 m^3 room and a reverberation time of 0.5 sec.

3+1 ROW COIL - 4 PIPE UNITS

The following standard rating conditions are used:

COOLING

Entering air temperature: + 27 °C d.b. + 19 °C w.b.
Water temperature: +7 °C E.W.T. +12 °C L.W.T.

HEATING

Entering air temperature: + 20 °C
Water temperature: +65 °C E.W.T. +55 °C L.W.T.

Available pressure: 0 Pa

MODEL		INALTO HPS-ECM 13+1					INALTO HPS-ECM 23+1					INALTO HPS-ECM 33+1				
INVERTER SPEED SIGNAL (VDC)		1	3	5	7,5	10	1	3	5	7,5	10	1	3	5	7,5	10
Air flow	m^3/h	460	870	1190	1520	1750	620	930	1345	1980	2580	740	1170	1720	2525	3290
Cooling total emission	kW	2,57	3,83	4,58	5,18	5,55	3,62	4,70	5,83	7,12	8,03	4,45	5,98	7,49	9,11	10,22
Cooling sensible emission	kW	1,98	3,21	3,99	4,71	5,17	2,71	3,68	4,76	6,16	7,27	3,29	4,65	6,08	7,83	9,19
Heating emission	kW	2,51	3,76	4,50	5,13	5,52	3,36	4,35	5,43	6,67	7,61	4,03	5,40	6,78	8,31	9,50
Dp Cooling	kPa	3,4	7,1	9,8	12,6	14,4	6,1	9,9	14,8	21,9	28,1	6,4	10,9	16,6	24,5	31,5
Dp Heating	kPa	5,3	11,1	15,3	19,3	22,1	8,6	13,8	20,5	29,7	37,5	5,0	8,5	12,9	18,5	23,4
Fan	W	10	26	55	104	154	12	25	65	183	371	13	30	85	264	541
Sound power (Lw)	dB(A)	35,0	44,0	49,0	56,0	60,0	39,0	46,0	53,0	61,0	69,0	41,0	48,0	56,0	64,0	70,0
Sound pressure (Lp) (1)	dB(A)	26,0	35,0	40,0	47,0	51,0	30,0	37,0	44,0	52,0	60,0	32,0	39,0	47,0	55,0	61,0

MODEL		INALTO HPS-ECM 43+1					INALTO HPS-ECM 53+1				
INVERTER SPEED SIGNAL (VDC)		1	3	5	7,5	10	1	3	5	7,5	10
Air flow	m^3/h	730	1250	1860	2690	3475	1480	2580	3550	4355	5095
Cooling total emission	kW	4,76	6,91	8,81	10,75	12,12	8,54	12,04	14,31	15,74	16,80
Cooling sensible emission	kW	3,43	5,22	6,92	8,89	10,40	6,47	9,85	12,09	13,75	15,08
Heating emission	kW	4,50	6,39	8,20	10,07	11,52	7,79	11,05	13,17	14,69	15,93
Dp Cooling	kPa	4,9	9,6	15,1	22,1	28,5	8,7	16,5	23,0	28,2	32,9
Dp Heating	kPa	6,8	12,9	20,2	29,4	37,4	10,7	20,1	27,6	33,6	38,8
Fan	W	12	30	78	226	505	41	144	346	644	1031
Sound power (Lw)	dB(A)	39,0	48,0	56,0	64,0	69,0	48,0	61,0	70,0	75,0	79,0
Sound pressure (Lp) (1)	dB(A)	30,0	39,0	47,0	55,0	60,0	39,0	52,0	61,0	66,0	70,0

(1) The sound pressure levels are 9 dB(A) lower than the sound power levels, apply to the reverberant field of a 100 m^3 room and a reverberation time of 0.5 sec.

4+1 ROW COIL - 4 PIPE UNITS

The following standard rating conditions are used:

COOLING

Entering air temperature: + 27 °C d.b. + 19 °C w.b.
Water temperature: +7 °C E.W.T. +12 °C L.W.T.

HEATING

Entering air temperature: + 20 °C
Water temperature: +65 °C E.W.T. +55 °C L.W.T.

MODEL		INALTO HPS-ECM 14+1					INALTO HPS-ECM 24+1					INALTO HPS-ECM 34+1				
INVERTER SPEED SIGNAL (VDC)		1	3	5	7,5	10	1	3	5	7,5	10	1	3	5	7,5	10
Air flow	m^3/h	420	810	1130	1475	1710	600	900	1320	1945	2542	710	1150	1690	2492	3215
Cooling total emission	kW	2,71	4,26	5,22	6,06	6,54	4,00	5,30	6,77	8,40	9,59	4,97	7,00	8,97	11,15	12,61
Cooling sensible emission	kW	2,00	3,38	4,29	5,19	5,75	2,89	3,99	5,28	6,92	8,23	3,54	5,21	6,93	9,07	10,67
Heating emission	kW	2,36	3,60	4,37	5,05	5,45	3,29	4,27	5,38	6,61	7,55	3,92	5,34	6,73	8,26	9,38
Dp Cooling	kPa	2,2	5,1	7,4	9,8	11,5	4,3	7,3	11,4	17,3	22,6	5,0	9,4	14,8	22,6	29,2
Dp Heating	kPa	4,8	10,2	14,5	18,8	21,6	8,3	13,3	20,1	29,2	37,0	4,8	8,3	12,6	18,3	23,0
Fan	W	10	25	64	117	158	12	25	66	182	377	13	31	87	268	544
Sound power (Lw)	dB(A)	35,0	44,0	49,0	56,0	60,0	39,0	46,0	53,0	61,0	69,0	41,0	48,0	56,0	64,0	70,0
Sound pressure (Lp) (1)	dB(A)	26,0	35,0	40,0	47,0	51,0	30,0	37,0	44,0	52,0	60,0	32,0	39,0	47,0	55,0	61,0

MODEL		INALTO HPS-ECM 44+1					INALTO HPS-ECM 54+1				
INVERTER SPEED SIGNAL (VDC)		1	3	5	7,5	10	1	3	5	7,5	10
Air flow	m^3/h	720	1230	1835	2660	3425	1460	2555	3525	4315	5045
Cooling total emission	kW	5,33	8,00	10,48	13,10	14,92	9,79	14,34	17,35	19,31	20,74
Cooling sensible emission	kW	3,74	5,83	7,91	10,33	12,19	7,13	11,16	13,91	15,95	17,58
Heating emission	kW	4,45	6,32	8,13	10,02	11,43	7,72	11,00	13,12	14,62	15,85
Dp Cooling	kPa	3,5	7,4	12,1	18,6	24,2	6,0	12,2	17,6	21,8	25,6
Dp Heating	kPa	6,7	12,7	19,9	29,1	36,8	10,5	20,0	27,4	33,3	38,5
Fan	W	13	31	79	231	518	41	148	355	650	1036
Sound power (Lw)	dB(A)	39,0	48,0	56,0	64,0	69,0	48,0	61,0	70,0	75,0	79,0
Sound pressure (Lp) (1)	dB(A)	30,0	39,0	47,0	55,0	60,0	39,0	52,0	61,0	66,0	70,0

(1) The sound pressure levels are 9 dB(A) lower than the sound power levels, apply to the reverberant field of a 100 m^3 room and a reverberation time of 0.5 sec.

4+2 ROW COIL - 4 PIPE UNITS

The following standard rating conditions are used:

COOLING

Entering air temperature: + 27 °C d.b. + 19 °C w.b.
Water temperature: +7 °C E.W.T. +12 °C L.W.T.

HEATING

Entering air temperature: + 20 °C
Water temperature: +65 °C E.W.T. +55 °C L.W.T.

Available pressure: 0 Pa

MODEL		INALTO HPS-ECM 14+2					INALTO HPS-ECM 24+2					INALTO HPS-ECM 34+2				
INVERTER SPEED SIGNAL (VDC)		1	3	5	7,5	10	1	3	5	7,5	10	1	3	5	7,5	10
Air flow	m^3/h	400	740	1055	1405	1650	570	865	1285	1895	2485	690	1125	1645	2441	3120
Cooling total emission	kW	2,65	4,08	5,11	6,00	6,54	3,90	5,24	6,78	8,45	9,68	4,86	6,90	8,82	11,01	12,42
Cooling sensible emission	kW	1,94	3,20	4,16	5,10	5,71	2,80	3,92	5,26	6,92	8,27	3,46	5,12	6,79	8,93	10,45
Heating emission	kW	4,49	7,16	9,16	11,07	12,26	6,37	8,75	11,61	15,03	17,83	7,69	11,13	14,57	18,89	22,02
Dp Cooling	kPa	2,1	4,7	7,1	9,6	11,4	4,1	7,1	11,4	17,5	23,0	4,8	9,1	14,4	22,1	28,4
Dp Heating	kPa	3,2	7,4	11,6	16,3	19,6	7,0	12,5	20,9	33,4	45,5	3,8	7,4	12,0	19,3	25,4
Fan	W	9	24	52	110	164	12	26	67	182	382	13	31	89	274	542
Sound power (Lw)	dB(A)	35,0	44,0	49,0	56,0	60,0	39,0	46,0	53,0	61,0	69,0	41,0	48,0	56,0	64,0	70,0
Sound pressure (Lp) (1)	dB(A)	26,0	35,0	40,0	47,0	51,0	30,0	37,0	44,0	52,0	60,0	32,0	39,0	47,0	55,0	61,0

MODEL		INALTO HPS-ECM 44+2					INALTO HPS-ECM 54+2					INALTO HPS-ECM 64+2				
INVERTER SPEED SIGNAL (VDC)		1	3	5	7,5	10	1	3	5	7,5	10	1	3	5	7,5	10
Air flow	m^3/h	700	1200	1800	2612	3355	1450	2525	3485	4260	4970	1700	2870	3925	4895	5885
Cooling total emission	kW	5,21	7,85	10,34	12,96	14,75	9,74	14,22	17,22	19,13	20,56	12,02	17,45	21,26	24,14	26,58
Cooling sensible emission	kW	3,65	5,72	7,78	10,19	12,00	7,09	11,06	13,78	15,77	17,38	8,61	13,38	16,97	19,88	22,53
Heating emission	kW	8,35	12,75	17,20	22,18	26,11	15,42	23,10	28,66	32,65	35,93	16,34	23,65	29,13	33,50	37,50
Dp Cooling	kPa	2,8	5,9	9,9	15,1	19,7	6,0	12,0	17,4	21,5	25,2	8,5	16,8	24,3	31,0	37,8
Dp Heating	kPa	5,6	12,0	20,6	32,8	44,1	9,6	19,9	29,5	37,3	44,4	10,6	20,8	30,4	39,1	47,9
Fan	W	13	32	81	237	529	42	152	363	656	1042	29	98	227	459	850
Sound power (Lw)	dB(A)	39,0	48,0	56,0	64,0	69,0	48,0	61,0	70,0	75,0	79,0	47,5	62,0	70,0	74,5	78,0
Sound pressure (Lp) (1)	dB(A)	30,0	39,0	47,0	55,0	60,0	39,0	52,0	61,0	66,0	70,0	38,5	53,0	61,0	65,5	69,0

(1) The sound pressure levels are 9 dB(A) lower than the sound power levels, apply to the reverberant field of a 100 m^3 room and a reverberation time of 0.5 sec.

6+2 ROW COIL - 4 PIPE UNITS

The following standard rating conditions are used:

COOLING

Entering air temperature: + 27 °C d.b. + 19 °C w.b.
Water temperature: +7 °C E.W.T. +12 °C L.W.T.

HEATING

Entering air temperature: + 20 °C
Water temperature: +65 °C E.W.T. +55 °C L.W.T.

MODEL		INALTO HPS-ECM 66+2				
INVERTER SPEED SIGNAL (VDC)		1	3	5	7,5	10
Air flow	m^3/h	1685	2845	3900	4865	5840
Cooling total emission	kW	13,72	20,61	25,72	29,65	32,95
Cooling sensible emission	kW	9,38	14,87	19,11	22,58	25,67
Heating emission	kW	16,22	23,53	29,03	33,37	37,34
Dp Cooling	kPa	10,4	21,8	32,9	43,0	53,2
Dp Heating	kPa	10,5	20,6	30,2	38,8	47,4
Fan	W	30	103	233	469	872
Sound power (Lw)	dB(A)	47,5	62,0	70,0	74,5	78,0
Sound pressure (Lp) (1)	dB(A)	38,5	53,0	61,0	65,5	69,0

(1) The sound pressure levels are 9 dB(A) lower than the sound power levels, apply to the reverberant field of a 100 m^3 room and a reverberation time of 0.5 sec.

DIMENSION, WEIGHT AND WATER CONTENT

LEFT CONFIGURATION (STANDARD)

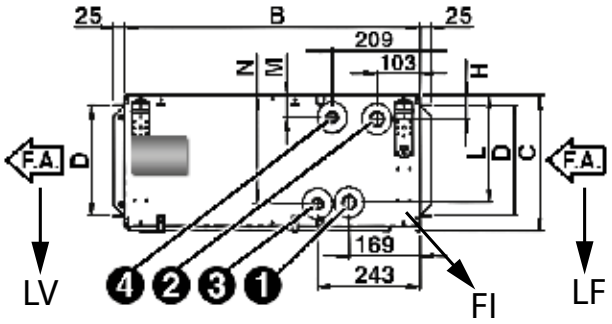

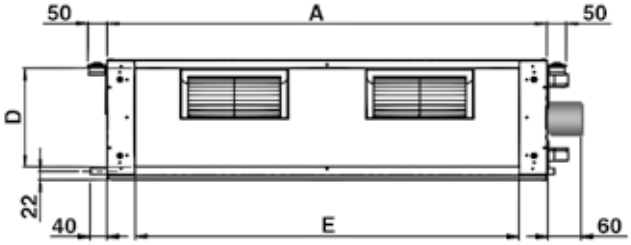

RIGHT CONFIGURATION (ON DEMAND)

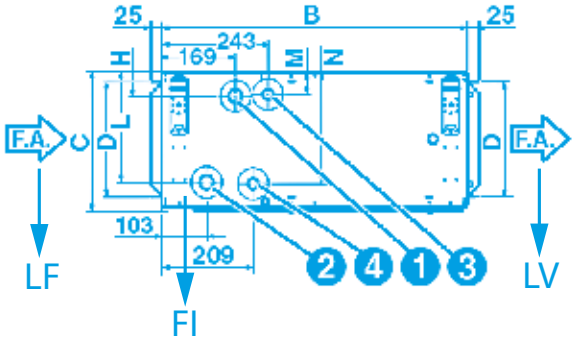

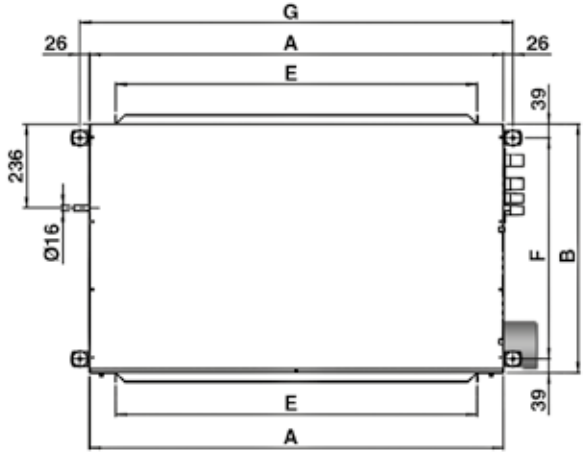

1 = main coil water inlet
2 = main coil water outlet
3 = additional coil water inlet
4 = additional coil water outlet
LV = fan side (outlet)
FI = filter
LF = filter side (inlet)
F.A. = air flow

STANDARD

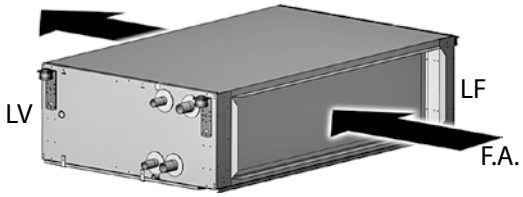

Coil connections on the left looking the air direction

WIRING TERMINAL BOARD

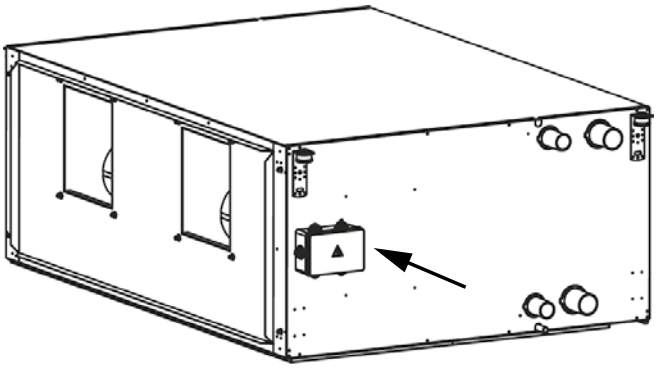

DIMENSIONS

MODEL		INALTO HPS-ECM 1	INALTO HPS-ECM 2	INALTO HPS-ECM 3	INALTO HPS-ECM 4	INALTO HPS-ECM 5	INALTO HPS-ECM 6
A	mm	1133	1133	1133	1445	1445	1535
B	mm	698	698	698	853	853	1100
C	mm	310	310	360	360	435	488
D	mm	255	255	305	293	368	421
E	mm	991	991	991	1302	1302	1393
F	mm	620	620	620	775	775	1022
G	mm	1185	1185	1185	1497	1497	1587
H	mm	54	54	54	58	58	59
L	mm	245	245	295	291	367	416
M	mm	50	50	50	54	54	55
N	mm	249	249	299	295	370	421

COIL CONNECTIONS

MODEL	POS.	1	2	3	4	5	6
Main coil inlet	1	3/4"	1"	1"	1 1/4"	1 1/4"	1 1/4"
Main coil outlet	2	3/4"	1"	1"	1 1/4"	1 1/4"	1 1/4"
Additional coil inlet	3	3/4"	3/4"	3/4"	1"	1"	1"
Additional coil outlet	4	3/4"	3/4"	3/4"	1"	1"	1"

PACKED UNIT

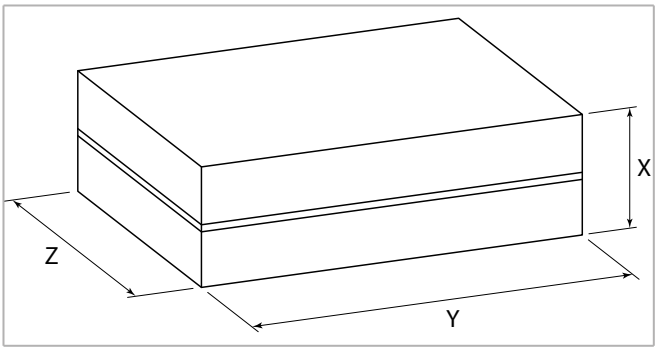

MODEL		INALTO HPS-ECM 1	INALTO HPS-ECM 2	INALTO HPS-ECM 3	INALTO HPS-ECM 4	INALTO HPS-ECM 5	INALTO HPS-ECM 6
X	mm	330		380		455	505
Y	mm	1290			1605		1695
Z	mm	805			960		1207

WEIGHT

Weight without packaging

MODEL	INALTO HPS-ECM 1	INALTO HPS-ECM 2	INALTO HPS-ECM 3	INALTO HPS-ECM 4	INALTO HPS-ECM 5	INALTO HPS-ECM 6
3 rows	45	46	54	75	85	-
3+1 rows	48	50	58	80	90	-
3+2 rows	50	52	60	83	94	-
4 rows	47	48	56	78	88	124
4+1 rows	50	51	60	83	94	-
4+2 rows	51	53	62	86	98	134
6 rows	-	-	-	-	-	130
6+2 rows	-	-	-	-	-	140

Weight with packaging

MODEL	INALTO HPS-ECM 1	INALTO HPS-ECM 2	INALTO HPS-ECM 3	INALTO HPS-ECM 4	INALTO HPS-ECM 5	INALTO HPS-ECM 6
3 rows	48	49	57	79	89	-
3+1 rows	51	53	61	84	94	-
3+2 rows	53	55	63	87	98	-
4 rows	50	51	59	82	92	127
4+1 rows	53	54	63	87	98	-
4+2 rows	54	56	65	90	102	137
6 rows	-	-	-	-	-	133
6+2 rows	-	-	-	-	-	143

UNITS HEATERS



AXIL/EQUITHERM 255



AXIL EC / AXIL F EC 259

UNITS HEATERS — AIR COOLED

	**Axil / Equitherm**	Water/Air	WATER	4 - 20 kW 12 - 105 kW 1600 - 9100 m³/h	-
	**Axil EC/ Axil F EC**	Water/Air	WATER	4 - 22 kW 3 - 44 kW 740 - 7085 m³/h	-

Water/Air

Cooling capacity
Heating capacity
Airflow rate

Non food retail
Shopping malls
Office buildings

Hotels
Industry

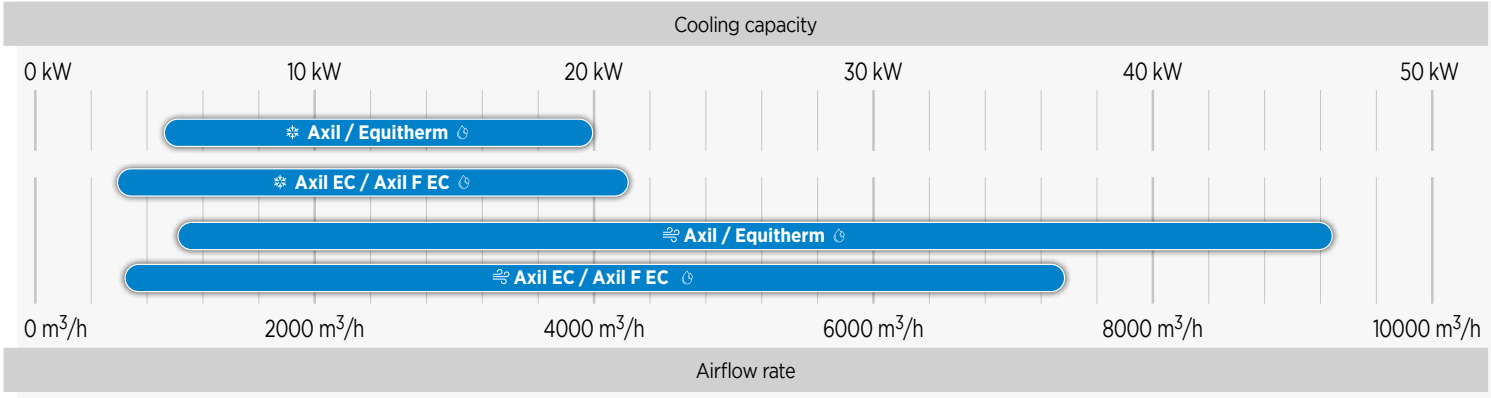

redge

AXIL/EQUITHERM

Unit heaters / Destratification fans



WATER

- 4 - 20 kW
- 12 - 105 kW
- 1600 - 9100 m^3/h

AXIL(A) 4(B) 02(C) 4(D)

(A) **AXIL** = Hot water - **AXIL F** = Hot/chilled water - **AXIL V** = High temperature water/steam - **AXIL Z** = Electrical heater - **EQUITHERM** = Destratifier
(B) Cabinet size - **4** = 526 - **5** = 636 - **6** = 743 - **9** = 1011
(C) **AXIL/AXIL F/AXIL V** = Number of rows - 2R, 3R, 4R - **AXIL Z** = Electrical heater capacity 14kW/24kW/39kW - **EQUITHERM** = 4-pole or 6-pole motor
(D) **AXIL/AXIL F/AXIL V** - 4 = 4/6-pole motor - 6 = 6/8-pole motor = - **AXIL Z** - R = control power fitted on (for thermostat control)

AXIL F

Cooling and Heating:
Hot water maximum 120°C / 16 bars
Minimum Chilled water inlet 7°C
Airflow : 2000 to 9500 m³/h
Cooling capacity (Air 26°C/55% - Water 7/12°C) : 4 to 22,4 kW
4 Sizes – 4/5/6/9

AXIL V

Heating only:
Hot water, Superheated water or Steam
Maximum 210°C / 20 bars
Airflow : 2100 to 9200 m³/h
Heating capacity (Air 18°C - Steam 15bars) : 31 to 151 kW
4 Sizes – 4/5/6/9

AXIL Z

Heating (electrical heater)
Airflow : 1560 to 4790 m³/h
Heating capacity : 14 / 24 / 39 kW
3 Sizes – 4/5/6

EQUITHERM

Ventilation only
Airflow : 1700 to 13000 m³/h
4 Sizes – 4/5/6/9

For full technical data pls. consult the Technical Document AGU.



Photos and illustrations are not contractual.

AXIL		AXIL (HOT WATER)				AXIL F (HOT/CHILLED WATER)			AXIL V (HIGH TEMPERATURE WATER/STEAM)			
		4	5	6	9	4	5	6	4	5	6	9
A	mm	526	636	743	1011	526	636	743	526	636	743	1011
B		526	636	743	1011	537	647	754	526	636	743	1011
C		468	468	468	576	468	468	468	468	468	468	576
D		69	69	60	92	69	69	60	69	69	60	92
E*		-	-	-	-	542	650	758	-	-	-	-
F*		-	-	-	-	450	450	450	-	-	-	-
Weight of standard units												
2R	kg	22	25	34	81	22	25	34	22	25	34	81
3R		23	28	39	90	23	28	39	23	28	39	90
4R		25	32	45	100	25	32	45	25	32	45	100
Steam		-	-	-	-	-	-	-	30	38	51	92

* Drain pan only available on chilled water version (AXIL F).

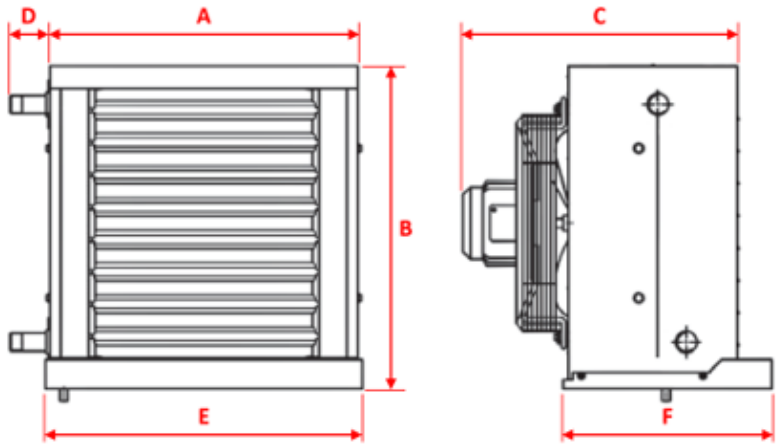

AXIL		AXIL Z (ELECTRICAL HEATER)			EQUITHERM (DESTRATIFIER)			
		4	5	6	4	5	6	9
A	mm	525	633	741	525	633	741	1009
B		526	636	743	526	636	743	1011
C		515	515	515	515	515	515	532
Weight of standard units								
Base unit	kg	22	30	38	14	20	25	42

* Electrical box only available on AXIL Z.

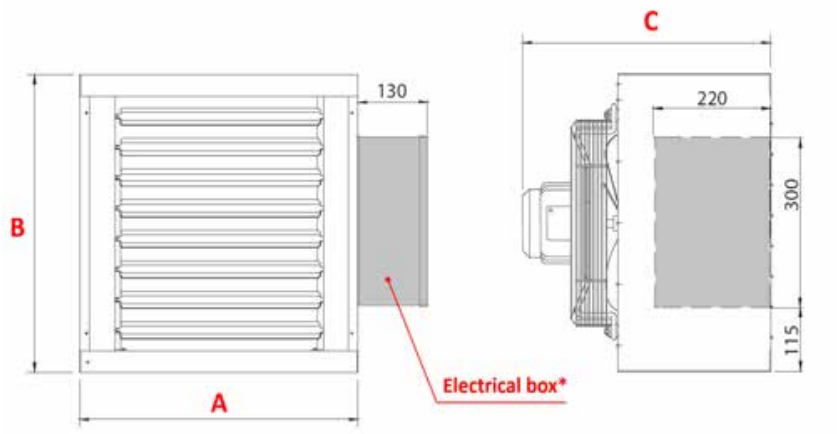

redge

NEXT LEVEL HVAC SOLUTIONS

redge

AXIL EC / AXILF EC

Unit heaters



WATER

- 4 - 22 kW
- 3 - 44 kW
- 740 - 7085 m^3/h

AXIL EC(A) 4(B) 02(C) 4(D)

(A) **AXIL EC** = Hot water - **AXIL F EC** = Hot/chilled water
(B) Cabinet size - **4** = 526 - **5** = 636 - **6** = 743 - **9** = 1011
(C) **AXIL EC/AXIL F EC** = Number of rows - 2R, 3R, 4R
(D) **AXIL EC /AXIL F EC** - 4 = 4/6-pole motor - 6 = 6/8-pole motor

AXIL EC

Heating:
Airflow : 740-7085 m3/h
Heating Capacity : 3,43 – 43,53 kW
Entering air temperature 15°; WT=45/40°C

AXIL F EC

Heating:
Airflow : 740-7085 m3/h
Heating Capacity : 3,43 – 43,53 kW
Entering air temperature 15°; WT=45/40°C
Cooling:
Airflow : 700 - 5275 m3/h
Heating Capacity : 2,79 – Kw 22,19 kW
Airflow : 2100 to 9200 m³/h
Entering air temperature 26°; WT 7/12°C - ΔT=5°; R.H.: 55 %

MAIN COMPONENTS

Motor ventilator made up of 3 elements:
• fan
• motor
• finger proof guard also acts as the main support and fixing frame.
This galvanized steel frame is mounted into the main casing via residually anti-vibration rubber mountings.

CASING

The casing is manufactured from galvanized prepainted steel finished in a light grey colour (RAL 9002).
The adjustable louvres are held firm by spring loaded pivots.
Fourway distribution is achieved by the addition of a second of the unit generally for downward application.

HELICOIDAL FAN

The fan, made of plastic material with glass reinforced plastic for the sizes 2-4-6 and of aluminium for the size 9, has a high-capacity profile that provides the maximum air volume with the minimum energy consumption.
The finger proof guard is painted with electroplating treatment, that ensures more protection against corrosion.
The air flow is uniformly distributed through the whole coil and consequently the unit is very quiet.

COIL

Heating and cooling :
• copper tubes
• aluminium fins
For Cooling only: the heat exchanger is not suitable for use in corrosive atmospheres or in environments where aluminium may be subject to corrosion.

EXCEPTIONAL DURABILITY

With a lifespan of around **20 years** this heater epitomizes **durability & reliability.**

ELECTRONIC MOTOR

Single phase permanent magnet brushless electronic motor, IP 44 protection and class B insulation. It is controlled with reconstructed current according to a sinusoidal wave.
The inverter board that controls the motor operation is powered by 230 Volt, single-phase and, with a switching system, it generates a three-phase frequency modulated, wave form power supply.
The electric power supply required for the machine is therefore single-phase with voltage of **230 - 240 V** and frequency of **50 - 60 Hz**

UNPARALLELED VERSATILITY

This Unit Heater can work also with low water temperature in heating mode, therefore it adapts to various conditions, providing **thermal comfort** and **energy saving.**

HIGH EFFICIENCY & ECO-FRIENDLY

The modulating EC motors of AXIL EC ensure **reduced energy consumption**, offering sustainable and economical heating.

QUIET OPERATION

Speed modulation and new plastic propellers ensure **low noise levels**, taking thermal comfort to new heights.
Heat your spaces with tranquility.



Photos and illustrations are not contractual.

Heating

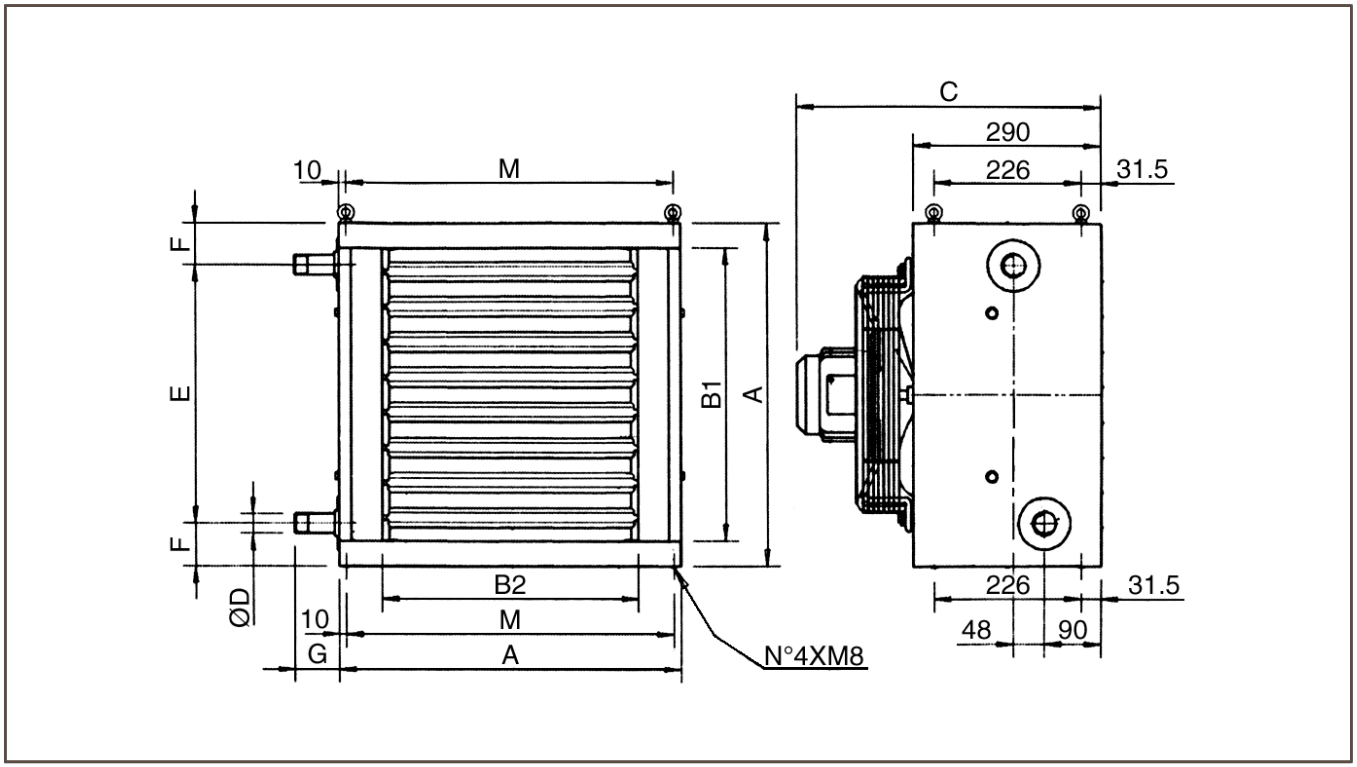

Dimensions

Model		AXIL EC 402/402/403	AXIL EC 502/503/504	AXIL EC 602/603/604	AXIL EC 902/903/904
A	mm	526	636	743	1011
B1	mm	450	550	641	885
B2	mm	394	500	610	875
C	mm	495	500	510	575
ØD	“	1	1	14	12
E	mm	397	497	588	832
F	mm	64,5	69,5	77,5	89,5
G	mm	69,0	69,0	60,0	91,5
M	mm	506	616	723	991

Weight and water content

Model		22	23	24	42	43	44	62	63	64	92	93	94
Weight	kg	24,0	25,0	26,0	31,0	32,5	34,0	41,0	42,5	44,5	72,5	77,0	81,0
Water content	l	1,3	1,7	2,2	1,9	2,7	3,4	2,9	4,0	5,1	5,4	7,6	9,8

For full technical data pls. consult the Technical Document AGU.

Cooling and heating

(for working on cooling, use only up to 4 Vdc)

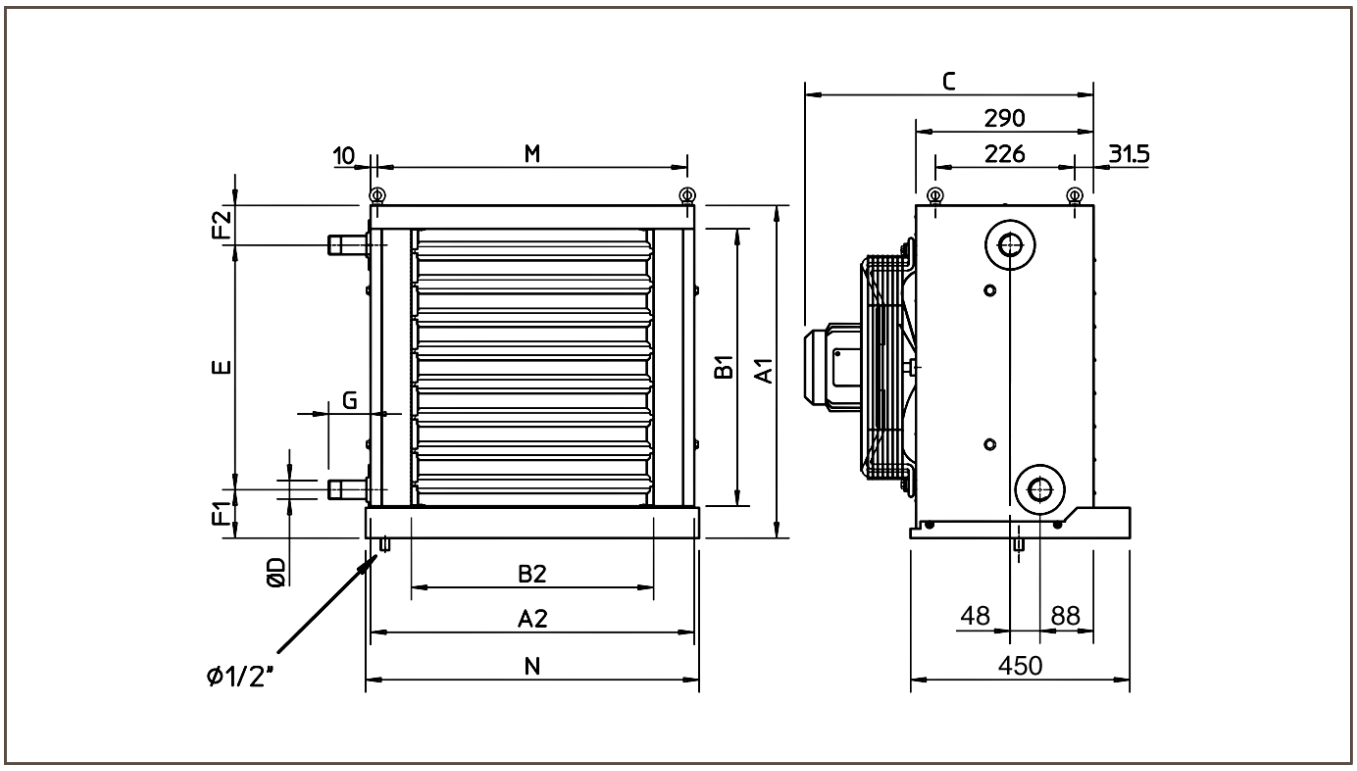

Dimensions

Model		2	4	6	9
A1	mm	537	647	754	1022
A2	mm	526	636	743	1011
B1	mm	450	550	641	885
B2	mm	394	500	610	875
C	mm	495	500	510	575
ØD	“	1	1	14	12
E	mm	397	497	588	832
F1	mm	75,5	80,5	88,5	100,5
F2	mm	64,5	69,5	77,5	89,5
G	mm	69,0	69,0	60,0	91,5
M	mm	506	616	723	991
N	mm	542	650	758	1026

Weight and water content

Model		23	24	43	44	63	64	93	94
Weight	kg	25,0	26,0	32,5	34,0	42,5	44,5	77,0	81,0
Water content	l	1,7	2,2	2,7	3,4	4,0	5,1	7,6	9,8

AIR HANDLING UNITS



Cleanair LX 265



OneAir 269

AIR HANDLING UNITS — AIR COOLED



Cleanair LX

2 - 550 kW
10 - 1300 kW
1000 - 100000 m³/h

OneAir

420 - 80000 m³/h

Air/Air
Water/Air

Cooling capacity
Heating capacity
Airflow rate

Non food retail
Shopping malls
Office buildings

Hotels
Industry

redge FORMERLY LENNOX

CLEANAIR LX

Modular air handling unit



- 2 - 550 kW
- 10 - 1300 kW
- 1000 - 100000 m3/h

EUROVENT CERTIFIED PERFORMANCE
www.eurovent-certification.com

- # Fully modular unit with 44 available sizes to provide **high flexibility** to any building design.
- # The **best choice** for any air treatment application: ventilation, filtration, heating, cooling, humidity control and heat recovery.
- # For indoor or outdoor applications, this **versatile** unit can operate with chillers, heat pumps, VRF or boilers.

HEAT RECOVERY

Plate heat recovery.
Wheel recovery.
Heat recovery systems with run-around coils.
Heat pipe heat recovery.





CASING & DESIGN

60mm sandwich panels, insulated with injected polyurethane or mineral wool.
Smooth internal surface suitable for hygienic applications.
Pre-painted panels built with Galvanised or Stainless steel A304.
Aluminium profiles with natural finish or anodised.
Robust base with 150mm frame built with Galvanised or Stainless steel A304 with specific reinforced corners with lifting holes.
Condensate drain pans in aluminium or stainless-steel. As an option, it can be inclined to ensure complete drainage.
Aluminium alloy perimetral rain shelter suitable for outdoor unit applications, with PVC joint covers and man-safe covers on all angles (as an option).

AIRFLOW

Fan available in double inlet forward, backward, air foil blades or plug-fan and EC plug fan.
As an option single fan with double motor or double fan 100% with isolation dampers.
Several available airflow configurations: top, bottom or horizontal, to fit each building's needs.
Aluminium dampers provided with nylon gears optionally supplied with manually operated control or suitable linkages for motorised control application.

Photos and illustrations are not contractual.

CONTROL

This range can be delivered with full control managed by CAREL controller – with communication possibility in common protocols:
- ModBus®
- BACnet®
- TCP/IP – SNMP
- TREND

CLIMATIC60



AIR TREATMENT

Filters available from G3 to H14:
- Medium efficiency flat filters
- Medium efficiency bag filters (loose or rigid)
- Medium efficiency roll filters
- High efficiency bag filters (loose or rigid)
- HEPA filters
- Activated carbon filters

Droplet eliminators, in several materials
- Drain pan: Peraluman or stainless steel
- Droplet eliminator: Polypropylene, Aluminium, SS304 or Galvanised steel

Several Humidifiers available:
- adiabatic, recirculated, steam generators, atomised water, air washers with single or twin spray nozzle bank.





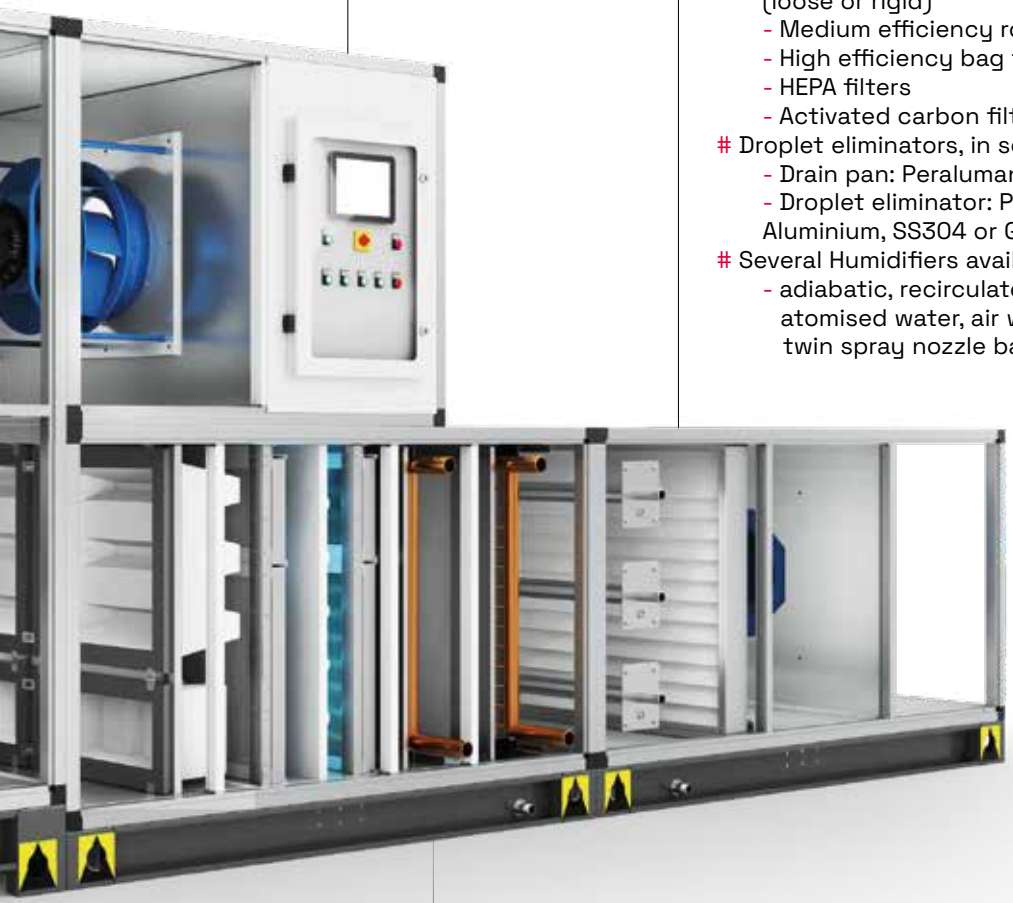

COILS

Several materials available: Cu/Al, Cu/AlPr, Cu/Cu, Cu/CuSn, Fe/Al
Water coils for chiller/heat pump applications.
Direct expansion coils for VRF applications.
Steam coils for boiler applications.
Electric coils supplied with safety thermostat with manual reset.

redge

NEXT LEVEL
HVAC SOLUTIONS

redge FORMERLY LENNOX

ONEAIR

Compact and Modular air handling unit









420 - 80000 m3/h

ISO 9001 ISO 14001 BUREAU VERITAS Certification

ErP Ready CE

- **High efficiency Air Handling Unit** to any building design.
- **Compact design**
- **High corrosion resistance** granted by magnelis structure for each size.
- **High heat recovery efficiency**
- **Easy maintenance**

PANELS

- Panels made of mineral wool, double-sided coated with metal sheet with zinc-magnesium coating - Magnelis®
- Corrosion class: C5
- Panel thickness: 50 mm
- Thermal insulation: mineral wool





POURED GASKET

- High tightness of inspection panels achieved through the use of a poured gasket
- Continuity of the gasket along the entire length
- Microbiological neutrality



DOOR HANDLES



- Easy access to panel components
- Adjustable roller pressure ensures that the panels remain sealed during the life of the air handling unit

Photos and illustrations are not contractual.

COMPACT SIZE

Ability to move the unit through a 900 mm door
Air handling unit base configuration: heat recovery, fan sets, filters, heater (optional)
Number of sections:
- Sizes LXVVSA11-22 RRG and HEX - one section
- Sizes LXVVSA29-56 RRG - two sections
- Sizes LXVVSA29-40 HEX - three sections



HIGH EFFICIENCY

Rotary heat exchanger: condensing or sorption
HEX counterflow heat exchanger: aluminium
Highly efficient fan sets with electronically commutated (EC) motors

EASY TO MAINTAIN AND CLEAN

Access to the unit from both sides
Easy access for cleaning fan sets and heat exchangers

CONTROLS



Positioned in the exhaust air path, which prevents condensation on controls components
Multifunctional controls integrated with the unit - configured and ready to operate (Plug&Play)
Ability to connect service devices without opening the unit
Remote servicing capability via Ethernet, Wi-Fi, Bluetooth, GSM

AIR HANDLING UNITS WITH ROTARY HEAT EXCHANGER



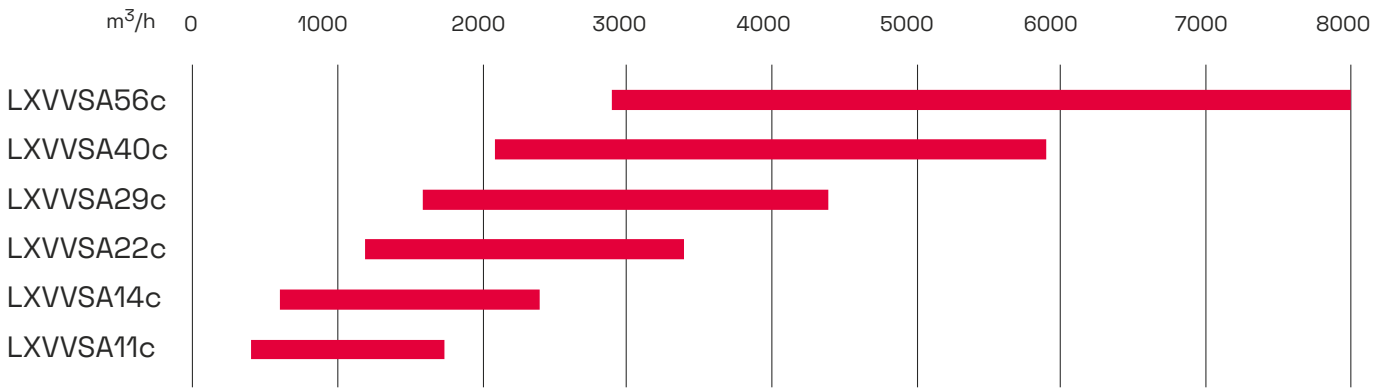

Size	Min. air flow	Max. air flow	Height *	Width	Length	Connection diameter	Connection height	Connection width	Frame height
	m³/h	m³/h	mm	mm	mm	mm	mm	mm	mm
LXVVSA11c	420	1700	962	750	1385	315	-	-	120
LXVVSA14c	640	2400	1062	865	1490	400	-	-	120
LXVVSA22c	1200	3400	1175	947	1605	-	400	500	120
LXVVSA29c	1600	4400	1330	1124	1752	-	400	700	120
LXVVSA40c	2100	5900	1478	1284	1752	-	400	800	120
LXVVSA56c	2900	8000	1718	1514	1752	-	500	1000	120

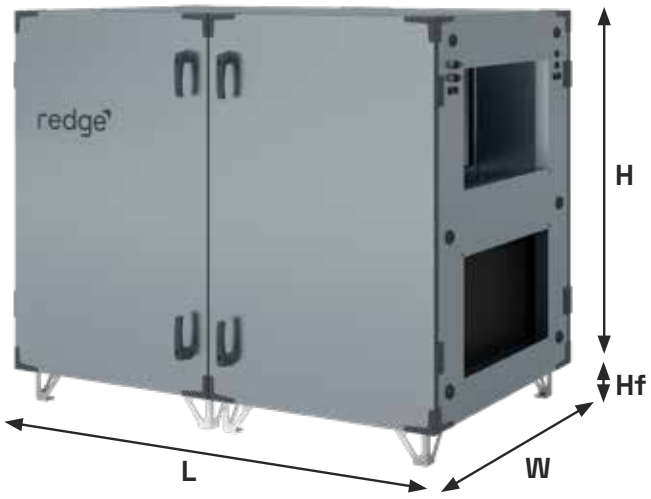

* The height of the unit does not include the height of the frame

AIR HANDLING UNITS WITH COUNTERFLOW HEAT EXCHANGER



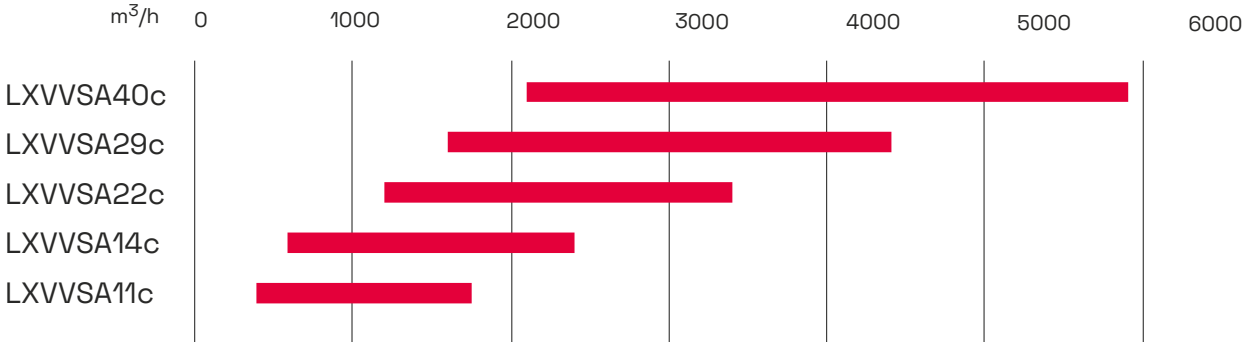

Size	Min. air flow	Max. air flow	Height *	Width	Length	Connection diameter	Connection height	Connection width	Frame height
	m³/h	m³/h	mm	mm	mm	mm	mm	mm	mm
LXVVSA11c	390	1700	962	750	2000	315	-	-	120
LXVVSA14c	590	2400	1062	865	2000	400	-	-	120
LXVVSA22c	1200	3400	1175	947	2540	-	400	500	120
LXVVSA29c	1600	4400	1330	1124	2811	-	400	700	120
LXVVSA40c	2100	5900	1478	1284	2811	-	400	800	120

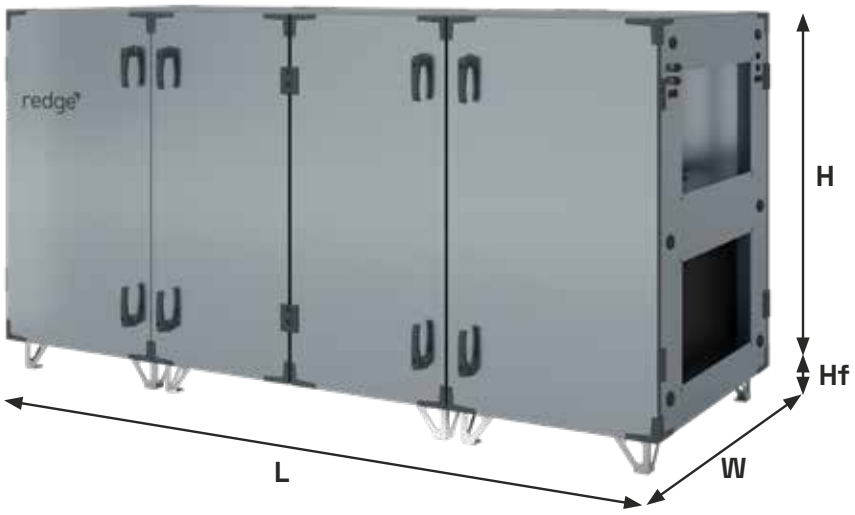

* The height of the unit does not include the height of the frame

ADDITIONAL AIR HANDLING FUNCTIONS

UNITS WITH ROTARY AND COUNTERFLOW HEAT EXCHANGER



ADDITIONAL PROTECTION AGAINST EXTERNAL CONDITIONS:

- Roof over base unit and extensions
- Cover on air dampers actuator

Available additional features: duct silencer, freon cooler, water cooler.

			LXVVSA11c	LXVVSA14c	LXVVSA22c	LXVVSA29c	LXVVSA40c	LXVVSA56c
Silencer	Length	mm	300/1000	300/1000	1065	1065	1065	1065
Freon cooler	External width	mm	630	750	794	910	1070	1300
	External height	mm	410	460	584	662	736	856
	Length	mm	540	540	771	771	771	771
Water cooler	External width	mm	630	750	794	910	1070	1300
	Outside height	mm	410	460	584	662	736	856
	Length	mm	540	540	718	718	718	718

ADDITIONAL PROTECTION AGAINST EXTERNAL CONDITIONS

- # Additional protection of the connection point to the main
- # Additional casing for damper actuators



CONTROLS

- # Positioned in the exhaust air path, which prevents condensation on controls components
- # Multifunctional controls integrated with the unit - configured and ready to operate (Plug&Play)
- # Ability to connect service devices without opening the unit
- # Remote servicing capability via Ethernet, Wi-Fi, Bluetooth, GSM





DEDICATED AIR-HANDLING MEASUREMENT BOARD

- # Optimised connections inside the air handling unit
- # Active filter contamination measurement
- # Continuous air volume (CAV) control
- # Exhaust air temperature and humidity measurement

EXTERNAL COMMUNICATION PORTS

- # Connecting to the controller without opening the unit

MINI-PLEAT FILTERS

Air filters with extended high efficiency filtration surface.

- Supply - EU7 (ePM2,5 65%)
- Exhaust - EU5 (ePM10 50%)





EC MOTORS

- Efficient, silent and low vibrations fan with electronically commutated motor in a IE4 class.



ENERGY RECOVERY

- Highly efficient counterflow hex recovery with by-pass.
- Recovery efficiency reaching 90%.

CASING



Panels filled with mineral wool, enclosed with steel sheet on both sides.

Casing parameters according to EN 1886: T2, TB3, L1, D1, F9.





RECUPERATOR BY-PASS

Stepless adjustment of heat recovery capacity.

Passive cooling function.

Recuperator frost protection.



CONTROLS

Multifunctional controls, integrated with the unit – fully pre-configured and ready to run.



LXVVS030s



LXVVS020s



LXVVS015s



LXVVS010s



LXVVS005s

←——— **150** m³/h - airflow range - **3300** m³/h ———→



Base unit overall data

Unit size	Nominal airflow	Airflow range	Height	Width	Duct connection heigth	DUCT CONNECTION WIDTH
	[m^3/h]	[m^3/h]	[mm]	[mm]	[mm]	[mm]
LXVVS005s	500	150 - 650	400	770	318	305
LXVVS010s	1000	300 - 1100	400	1190	318	515
LXVVS015s	1500	450 - 1650	400	1590	318	715
LXVVS020s	2000	600 - 2200	490	1650	408	743
LXVVS030s	3000	900 - 3300	490	2200	408	1018

Section length

Unit size	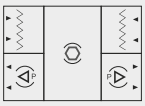	F	H	C	HC
	Base unit	Additional air treatment functions			
	[mm]	[mm]	[mm]	[mm]	[mm]
LXVVS005s	1350	320	320	390 - 480	480 - 800
LXVVS010s	1500	220	220	390 - 480	480 - 780
LXVVS015s	1500	220	220	390 - 480	480 - 780
LXVVS020s	1828	220	220	390 - 480	480 - 780
LXVVS030s	1828	220	220	390 - 480	480 - 780

Duct accessories

Dimmension WxH [mm]	LXVVS005s	LXVVS010s	LXVVS015s	LXVVS020s	LXVVS030s
Flexible connection	305x313	485x288	685x288	730x375	1005x375
Air damper	305x313	485x288	685x288	730x375	1005x375
Rectangle spigot	305x313/300x300	510x310/400x350	710x310/400x350	740x400/500x400	1015x400/800x400
Rounded spigot	305x313/355	510x310/355	710x310/355	740x400/450	1015x400/450

CASING

- Panels filled with mineral wool, enclosed with steel sheet on both sides.
- Casing parameters according to EN 1886: T2, TB3, L1, D1, F9.









ENERGY RECOVERY

- Highly efficient heat wheel driven by EC motor.
- Recovery efficiency reaching 86%.

CONTROLS

- Multifunctional controls, integrated with the unit – fully pre-configured and ready to run.

MINI-PLEAT FILTERS

Air filters with extended high efficiency filtration surface.

Supply - EU7 (ePM2,5 65%)
Exhaust - EU5 (ePM10 50%)







EC MOTORS

Efficient, silent and low vibrations fan with electronically commutated motor in a IE4 class.



ENERGY RECOVERY

Highly efficient counterflow hex recovery with by-pass
Recovery efficiency reaching 90%

With rotary heat exchanger or hex counter-flow heat exchanger



← 840 m³/h - airflow range - 16 500 m³/h →

With rotary heat exchanger and heat pump



← 1 200 m³/h - airflow range - 7 500 m³/h →

TOP with counter-flow heat exchanger (hex)



← 1 250 m³/h - airflow range - 4 000 m³/h →

Base unit overall data

Unit size	Nominal airflow	Airflow range	Height	Width	Duct connection heigth	Duct connection width
	[m^3/h]	[m^3/h]	[mm]	[mm]	[mm]	[mm]
LXVVS021c	2100	840 - 2310	991	967	345	860
LXVVS030c	3000	900 - 3300	1255	967	480	860
LXVVS040c	4000	1200 - 4400	1255	1174	480	1065
LXVVS055c	5500	1650 - 6050	1525	1345	615	1235
LXVVS075c	7500	2250 - 8250	1765	1486	735	1380
LXVVS100c	10000	3000 - 11000	1965	1666	835	1560
LXVVS120c	12000	3600 - 13200	2039	1897	870	1790
LXVVS150c	15000	4500 - 16500	2241	2091	970	1985

Height includes 90 mm base rail

Base unit lengths

Unit size				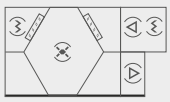	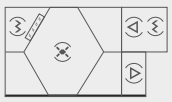	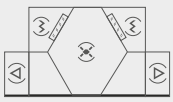
	[mm]	[mm]	[mm]	[mm]	[mm]	[mm]
LXVVS021c	1240	1080	1080	2 230	2 230	2 500
LXVVS030c	1240	1080	1080	2 230	2 230	2 500
LXVVS040c	1240	1080	1080	2 230	2 230	2 500
LXVVS055c	1240	1080	1080	2 290	2 290	2 560
LXVVS075c	1240	1080	1080	2 530	2 530	2 800
LXVVS100c	1300	1300	1080	2 570	2 570	2 800
LXVVS120c	1300	1300	1080	2 670	2 670	2 900
LXVVS150c	1300	1300	1080	2 730	2 730	2 940

Additional section length

Unit size	F	H	C	HC	S
	[mm]	[mm]	[mm]	[mm]	[mm]
LXVVS021c	310	310 - 710	370 - 710	710	1080
LXVVS030c	310	310 - 710	370 - 710	710	1080
LXVVS040c	310	310 - 710	370 - 710	710	1080
LXVVS055c	310	310 - 630	450 - 790	790	1080
LXVVS075c	310	310 - 630	450 - 790	790	1080
LXVVS100c	310	310 - 630	890	890	1080
LXVVS120c	310	310 - 630	890	890	1080
LXVVS150c	310	310 - 630	920	920	1080

CASING SKIN

- # Rigid, durable structure of the casing.
- # Low absorption of heat radiation and UV.
- # High resistance to weather conditions.

FAN SECTION CAGE

- # Improved longitudinal rigidity of the structure.
- # Facilitated sections joining.



FOUNDATION

- # Transport facilitation.
- # High resistance of the frame to deflection.

STRUCTURAL POSTS

- # Broken thermal bridges as standard.
- # High resistance to weather conditions and UV radiation.

To consult the technical data, please refer to the AGU document.

CANOPY

- The canopy is made of 0,5 mm steel sheet, double side coated with 185 um of zinc (DX51D AZ185).
- Canopy is assembled of modules equipped with self-latching grooves securing perfect tightness of the joints. Modular structure of the canopy ensures its easy and safe assembly.



ERGONOMIC INSPECTION PANEL LOCK

- Highly aesthetic and ergonomic handles securing perfect tightness of inspection panels.

ALUMINUM STRUCTURAL POSTS WITH ADDITIONAL SEALING BLADE AND THERMAL BREAK

- Broken thermal bridge as standard – eliminates humidity condensation on units structural elements.
- Blade along the inspection window ensures labyrinth tightening between panel and AHU body – currently the most effective solution on the market, mainly applied to laboratory equipment.
- Symmetrical groove in the vertical post's mounting feet secures its 100% tightness with the AHU casing structure.

redge

NEXT LEVEL
HVAC SOLUTIONS

redge

NEOSTAR
FC/FI NEOSTAR PULSE
V-KING PULSE

Air cooled condensers and dry-coolers



HFC

W GLYCOL

NEOSTAR	V-KING PULSE	FC/FI NEOSTAR PULSE
18 - **1280** kW	**50** - **2200** kW	**20** - **1200** kW

Versatile ranges available in multiple versions with thousands of models to suit any project and building requirement: **optimised efficiency**, **quiet operation** and **compactness**.

SOLUTIONS FOR ALL APPLICATIONS

NEOSTAR: remote air cooled condenser with flat coil design and low noise fans that allows perfect integration in urban environments.
FC NEOSTAR PULSE: flat dry cooler with compact and highly efficient coils.
FI NEOSTAR PULSE : flat dry cooler that operates with low pressure drop and high capacity, ideal for industrial applications.
V-KING PULSE : very powerful V-shaped dry cooler, with a smaller footprint than a flat model.

Contact us to select the right coil treatment to extend your unit's lifespan.

CASING & DESIGN

Casing made of white pre-painted galvanized sheet steel (NEOSTAR & FC/FI NEOSTAR PULSE) and epoxy painted metal structure (V-KING PULSE) for maximum corrosion resistance.
Fans arranged in line or in parallel, on both NEOSTAR and V-KING PULSE ranges:

FC/FI Neostar Pulse:



In line configuration



Parallel configuration

V-King Pulse:



In line configuration

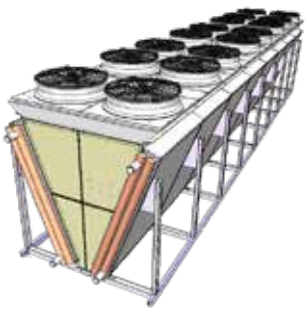

Parallel configuration

Photos and illustrations are not contractual.

VENTILATION

The NEOSTAR & FC/FI NEOSTAR Pulse ranges are equipped as standard with two-speed external rotor motor fans (triangle and star coupling).
EC motor fans enabling speed variation and reducing the energy consumption are available as an option.
Available with 800 and 910mm diameter fans.



COILS

Aluminium fins with 1.9 mm (NEOSTAR, FC NEOSTAR PULSE, V-KING PULSE VC) or 2.12 mm (FI NEOSTAR PULSE, V-KING PULSE VI) spacing.
Combined with staggered copper tubes, the coils are very efficient and compact.

redge

NEXT LEVEL HVAC SOLUTIONS

redge

RedgeCloud

Multi-site & multi-unit connectivity solution



Convenience through remote monitoring: the units' performance data is accessible from the comfort of the office.

24/7 monitoring ensures the units' **reliability** and provides building operators with **peace of mind**.

The units' performance optimisation leads to **reduced energy consumption and operating costs**.

Evaluate **savings on each maintenance procedure** by using real time collected data.

Ensure comfort in any season with automatic management of CO_2 levels(1) and humidity(2).



USER-FRIENDLY DASHBOARDS

The **SITE DASHBOARD** gives a complete overview of the site, presenting monthly or yearly performances, alarm history and energy consumption(3) of all installed units.

The **UNIT DASHBOARD** allows an overview of a single unit, presenting graphs with the history of indoor and outdoor temperature variations, CO_2 level(1) and relative humidity(2) in the supply air stream and energy consumption(3) for a specific period.

EXPERT ANALYSIS

Thanks to the analysis of the collected data, the Redge experts will provide the end-users with quarterly reports and recommendations on how to optimise the system's performance and energy consumption(3).

eComfort MC



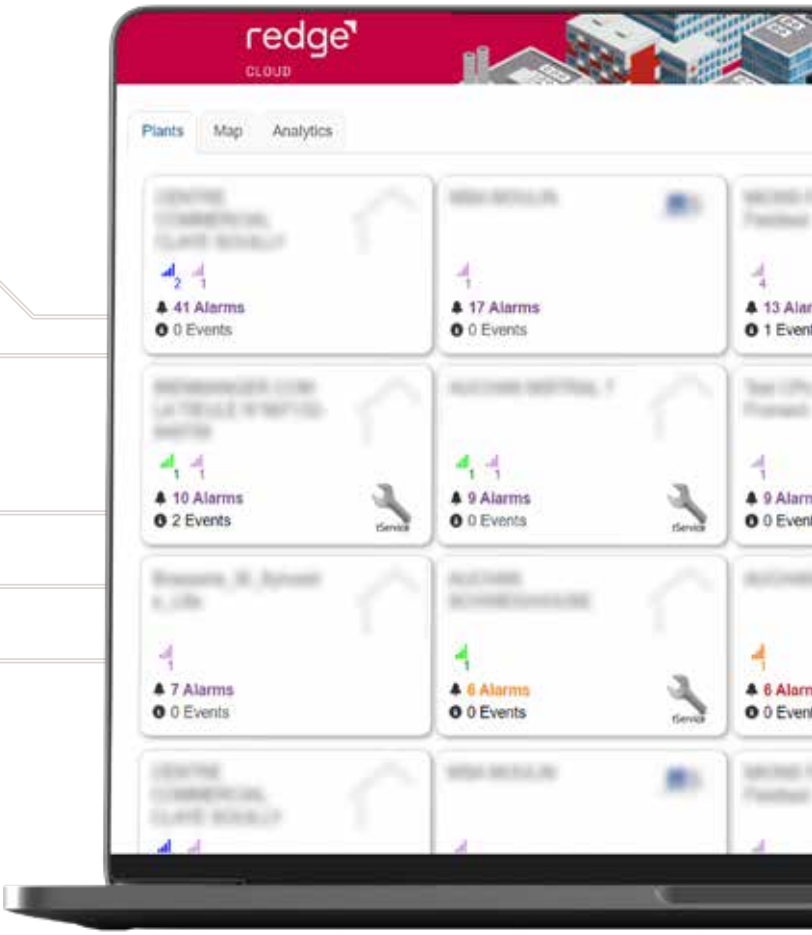

(1) Require Air Quality Sensor (CO_2) - optional feature on rooftops.
(2) Require Humidity Control Pack - optional feature on rooftops.
(3) Require Electric Energy Meter - optional feature on rooftops, chillers and heat pumps.

EASY MONITORING & CONTROL

Specifically designed for end-users, the **eDisplay** allows:
Remote access from any web browser.
Intuitive adjustment of the system's setpoints:
- Room temperature.
- Room temperature set points.
- Indoor CO_2 levels(1).
- Indoor humidity levels(2).
- System ON or OFF button.
- External temperature.
- Adjust settings.
- Adjust time schedule.
- Fan status.
- Time schedule status.



IMPROVED RESPONSIVENESS

The alarm log allows easy identification of critical issues and enables speedy action on them, thus reducing downtime.
Email notifications are sent when high level alarms are activated.

RedgeCloud is **available as an option on all units.**

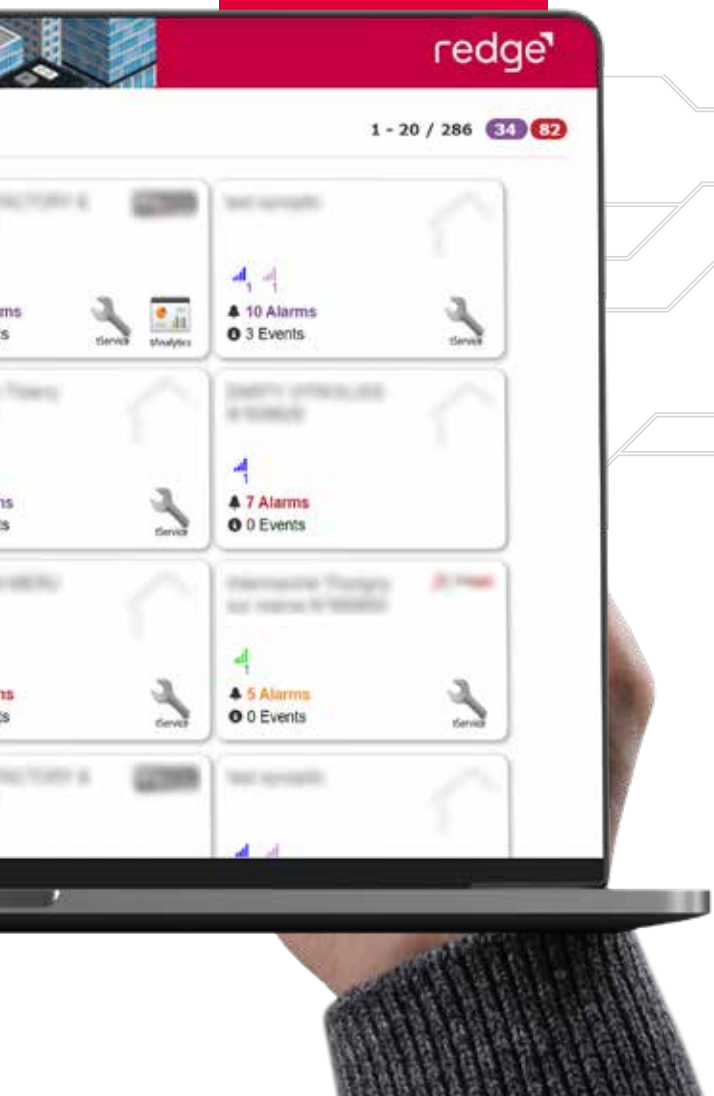

Evio





eComfort

EXTENDED UNITS' LIFESPAN

The permanent monitoring enables the optimisation of the units' performance and increases their lifespan.

Photos and illustrations are not contractual.

redge

NEXT LEVEL
HVAC SOLUTIONS

redge

e-savvy

Smart building management system



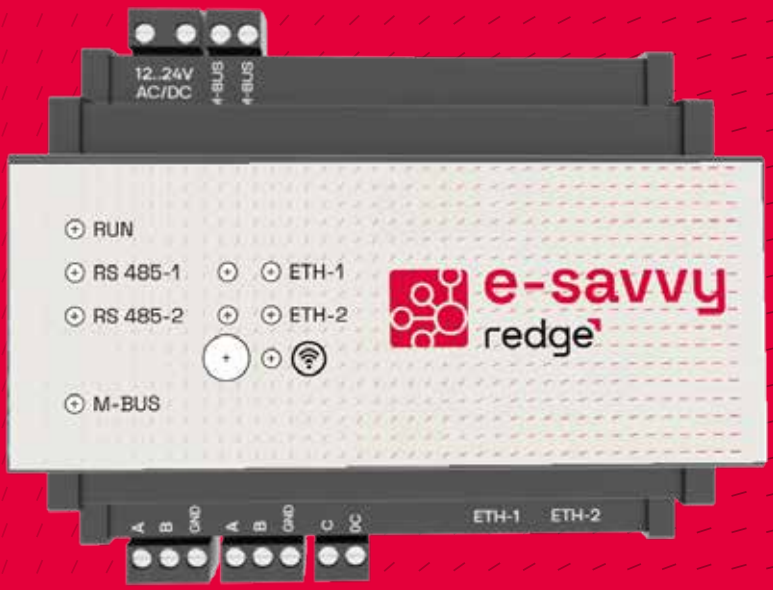

Interoperable Monitoring System
Intercative, intuitive and evolutionary
Optimisation of Energy Consumption
Management of load shedding signals
Easy implementation and use



GENERAL DESCRIPTION :

e-savvy is an innovative solution from Redge for the monitoring and management of HVAC systems.

Thanks to its intuitive man machine interface, e-savvy allows you to monitor in real time the status of all the devices. The interactive system allows the modification of several
parameters such as setti
ngs and schedules of each area and to follow the trends. e-savvy is a connected system able to send alerts in real
time to it's users.

e-savvy is a simple, intuitive and user friendly tool allowing the zoning and the creation of several schedules in order to closely follow the needs of its end users.

CUSTOMER BENEFITS :

Compatible with Climatic 60 and eClimatic from Redge
Electrical load shedding function (stop, 50% and 100% capacity)
Very easy to install, it is compatible with several devices such as tablets and PC computers
Alarm function by mail

Photos et illustrations non contractuelles.

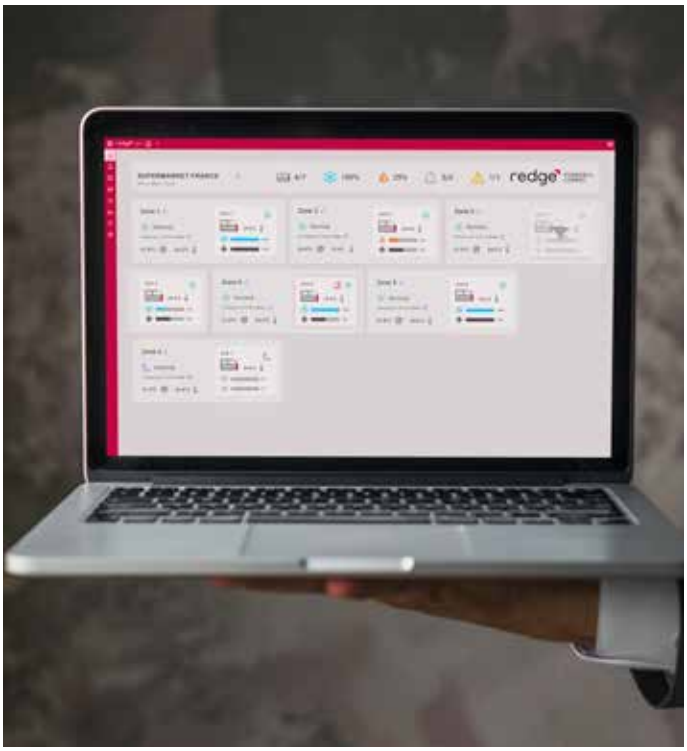



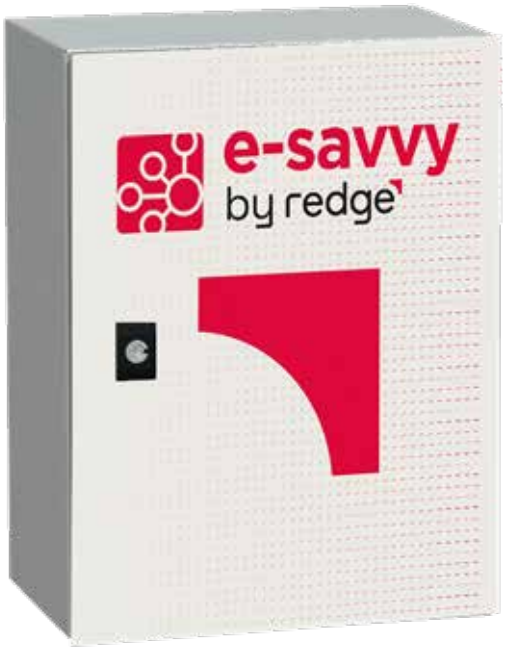

PLUG & PLAY SYSTEM:

Delivered with:
Already pre-configured.
Delivered in IP55 aluminium electrical box.
230/1/50 inlet power.
Including electrical security devices.
Indoor installation.
Commissioning with the units.

redge

NEXT LEVEL
HVAC SOLUTIONS

OUR SERVICES

SYSTEM'S OPTIMISATION

Avoid bad surprises and system faults! Turn to our Redge experts to receive in depth-dilapidations on your entire system. From your units, to the interaction with your other equipment. We are here to help diagnose the issue and avoid down-time.

REPAIRS

You can rely on our factory-trained technicians to efficiently solve problems and reduce downtime.

SPARE PARTS

Thanks to Redge Spare Parts Center you are sure to get the right part when you need it.

SYSTEM'S MODERNISATION

Our specialists support you in choosing the best smart-system solution, helping you to significantly reduce your energy cost and enhance your building performance. On top of this, we keep you ahead of evolving refrigerant legislation and tax changes.

REGULATORY SUPPORT

Rely on our experts for compliance guidance on the constantly evolving regulations.

MAINTENANCE

HVAC units often operate under harsh conditions that can affect their lifespan and performance, leading to extra energy consumption and operational costs. Having our experts carry out maintenance checks and audits, will ensure your unit is performing in the most efficient way, at all times.

EXPLORE REDGE PRODUCTS

At Redge, we are truly committed to offering you the best thermal comfort experience. We design and manufacture high-quality HVAC equipment, offering you the best technology, smartest software and our unique service support during the entire life-span of your equipment.



Visit our website and discover more about Redge solutions.
redgehvac.com



REDGE

info.uk@redgehvac.com

HVAC-Catalogue-2026-EN